State :	South Carolina	Wind Velocity (mph) :	100
Federal Proj :	Carolina Crossroads Phase 1 & 2	Ice Load Area :	Yes
State Proj :	P039718		
County :	Lexington & Richland		
Route :	I-26 & I-126		

Reference:

6th Edition of Standard Specifications for Structural Supports for Highway Signs, Luminaires and Traffic Signals, as published by the American Association of State Highway and Transportation Officials, dated 2013. (Includes all Interims)

INFRASTRUCTURE CONSULTING & ENGINEERING

SHOP DRAWING REVIEW

REVIEW IS FOR GENERAL COMPLIANCE WITH CONTRACT DOCUMENTS. NO RESPONSIBILITY IS ASSUMED FOR CORRECTNESS OF DIMENSIONS OR DETAILS.

APPROVED ☒
APPROVED AS NOTED ☐
REVISE AND RESUBMIT ☐
REJECTED ☐

BY: AOL DATE: 12/12/2024

Index:

F1C			Cover sheet
F2C			Material Specifications & Foundation Design Assumptions
F3C	-	F7C	Truss Design format
F8C			Post Design format
F9C	-	F10C	Anchor Bolt and Base Plate Design format
F11C	-	F12C	Truss Connection to Post Design format
F13C	-	F14C	Deflection and Camber format
F15C	-	F16C	Member Selection format
F17C			Truss Splice Design format (if required)
F18C			Vibration and Fatigue Design format
F19C	-	F28C	Foundation Design (Spread and Cylindrical)

SOUTH CAROLINA LICENSED PROFESSIONAL ENGINEER
No. 35290
ROBERT R WIGINTON

Nov 8 2024

These design format sheets prefixed with "F" are furnished to illustrate basic formulas used by our design program. Work these format sheets with Box Truss Cantilever Design information sheet(s) prefixed with "C" followed by design computation printouts. Step by step calculations are not supplied nor required. Results of the calculations presented are those produced from standard steel design calculations or the results of issues in fabrication. The approver may verify these results using any method they deem suitable, resulting increase in material requirements will be considered but may increase cost to the owner if deemed excessive. Walpar Engineers have attested that these designs and drawings meet the required specifications for the project stated above by sealing and signing the documents.

SOUTH CAROLINA LICENSED PROFESSIONAL ENGINEER
No. 38665
DAVID A LALLONE

Sep 8 2023

Material Specifications: (See General Notes drawing for complete list & for items not shown)

Hardware ---------- Primary		ASTM F3125 Gr A325
	Secondary	ASTM A307
Wide Flange Sections ----------		ASTM A992 (50 ksi)
Plates ----------		ASTM A709 Gr 50 (50 ksi)
Angles ----------		ASTM A36
Anchor Bolts ----------		ASTM F1554, Gr 55, S1
Anchor Nuts ----------		ASTM A563, Gr DH or A194 Gr 2H
Galvanizing ---------- Hardware		ASTM A153
	Structural	ASTM A123
Welding ----------		AWS Specifications D1.1, Latest Revision
Chords ----------Steel Pipe		ASTM A500 Gr B and/or C, ASTM A252 Gr 1, 2, or 3, ASTM A53 Gr A and/or B, and API 5L X42 through X80 (52 ksi Min. Yield and not to exceed 82 ksi)
Posts ----------Steel Pipe		
Struts & Diagonals ----------Steel Pipe		

Foundation Design Assumptions:

1. See printouts for maximum soil bearing capacity and passive pressure.
2. Wind gust factors are included in loadings.
3. Allowables increased by 33% for Group II loadings.
4. Concrete f 'c = 3000 psi
5. Reinforcing steel to be ASTM – A706, Grade 60, Fy = 60 KSI.
6. Design cylindrical footings as piles with lateral loads. Overturning moments and lateral soil forces are critical. Therefore, use plastic hinge approach for soil resistance and maximum moment in piles (Rutledge, Seiler, Broms method).



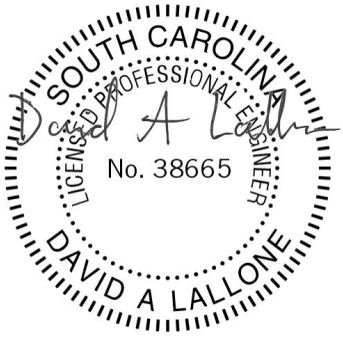

Sep 8 2023

Nov 8 2024

Wind Load

$P = 0.00256\ (K_z)(G)(V^2)(I_r)(C_d)$ Eq. 3.8.3-1, page 3-5 (P min = 25 psf, for Group III only)

Alternate Method for Wind Pressure (Appendix C) (If required)

* $P = 0.00256\ (1.3*V)^2\ (C_d)\ (C_h)$ Eq (C.3-1 psf), page C-1)

Where
V = Wind Velocity (MPH)
C_d = Wind Drag Coefficient from Table 3.8.6-1, pg's 3-17, 3-18, 3-19
K_z = Coefficient of Height from Table 3.8.4-1, pg 3-13
C_h = Coefficient of Height from Table C.3-1, pg C-2
G = Gust Effect Factor (minimum of 1.14)
I_r = Wind Importance Factor = 1.00 for 50 year interval

Wind on Sign and Walkway (if req'd) (C_d = see Table 3.8.6-1)

$W_p = (D)(B_2)(P_s)P_s$ = wind on sign in PSF
D = Sign Height (ft)
B_2 = Sign Length (ft)

$W_w = (0.75)(WL)(P_s)$ (use 9" depth for walkway)
WL = Walkway Length (ft)

Wind on Truss or Arm (C_d = see Table 3-6)

$W_h = (A_t)(B_1)(P_t)P_t$ = Wind on Truss in PSF

A_t = Exposed area of truss/arm per foot
$A_t = \frac{2(\text{Chord OD}) + (\text{Total Projected Area of Web Members}) / (\text{Length of Truss})}{12}$
B_1 = Exposed truss/arm length (ft)

Moment due to wind (Each Chord, Top and Bottom)

$M_h = \frac{(W_p)(A_2)+(W_h)(A_1)}{2}$

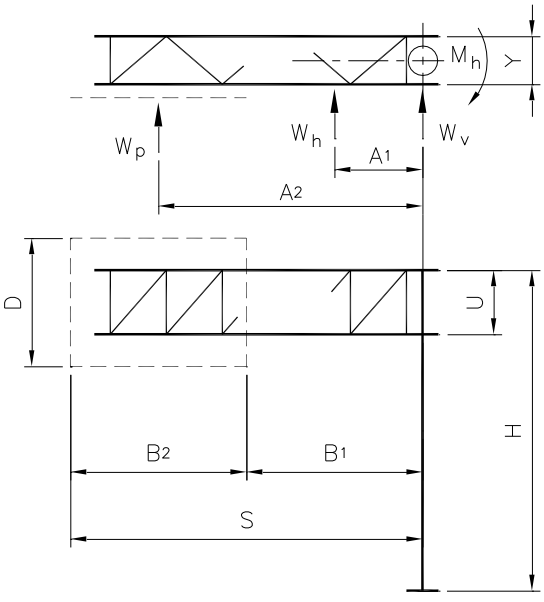

SOUTH CAROLINA LICENSED PROFESSIONAL ENGINEER No. 35290 ROBERT R WIGINTON

Nov 8 2024

SOUTH CAROLINA LICENSED PROFESSIONAL ENGINEER No. 38665 DAVID A LALLONE

Sep 8 2023

Dead Load

Kv_i = 0 when Horizontal Struts are not used
Kv_i = 1 when Horizontal Struts are used
Hw = Estimated weight of signs and hangers = 7 psf, unless otherwise specified, see printouts
Ww = Estimated weight of walkway, if required, is calculated based on width of walkway and any specified railing, lights and safety angle and is calculated by the program based on spacing of supports. See printouts for estimated weight

W_d = Weight per foot of Truss

$$= 4(\text{Chord Wgt}) + 2(\text{Vert Wgt}) + 2(1.414)(\text{Vert Diag Wgt}) + 3(\text{Horiz Strut Wgt})\frac{Y}{S} + 2(\text{Horiz Strut Wgt})\frac{Y}{U}(Kv_i)$$

$$+ 2(\text{Horiz Diag Wgt})\frac{\sqrt{U^2+Y^2}}{U} + 3(\text{Int Diag Wgt})\frac{\sqrt{U^2+Y^2}}{S}$$

DL_t = Weight of Truss
= $(W_d)(S)$

DL_s = Weight of signs, hangers and walkway
= (Hw) (D) (B_2) + (Ww) (B_2) (Kw_i)

Kw_i = 0 where walkway not required
Kw_i = 1 where walkway required

Chord load due to dead load (each chord)

$$Pcd = \frac{(DL_t)(\frac{1}{2}S) + (DL_s)(A_2)}{2U}$$

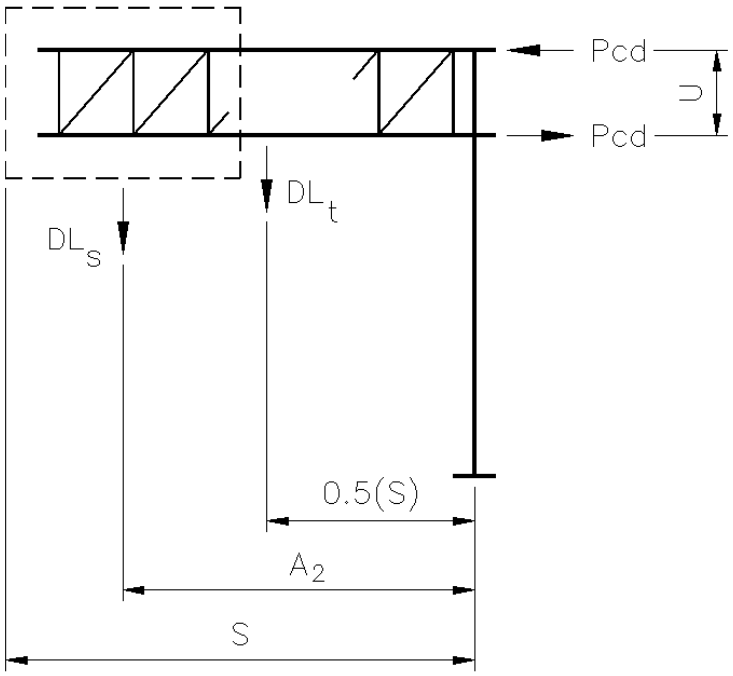

SOUTH CAROLINA LICENSED PROFESSIONAL ENGINEER
No. 35290
ROBERT R WIGINTON

Nov 8 2024

SOUTH CAROLINA LICENSED PROFESSIONAL ENGINEER
No. 38665
DAVID A LALLONE

Sep 8 2023

Ice Load

3 PSF applied to one face of sign and around surface of structural members. (See Fig.3.7-1, pg 3-4 for areas)

Wi = Ice load per foot of truss

$$= \frac{3}{12}\left[\begin{array}{l} 4\pi(\text{Chord OD}) + 2\pi(\text{Vert Strut OD}) + 2\pi(1.414)(\text{Vert Diag OD}) + 3\pi(\text{Horiz Strut OD})\frac{Y}{S} + 2\pi(\text{Horiz Diag OD})\frac{\sqrt{U^2+Y^2}}{U} \\ + 3\pi(\text{Int Diag OD})\frac{\sqrt{U^2+Y^2}}{S} \end{array}\right]$$

IL_t = Weight of ice on truss
= $(W_i)(S)$

IL_s = Weight of ice on signs and walkway
= $(3)(D)(B_2) + (21)(B_2)(Kw_i)$

Assume ice on walkway = 21 lbs per lineal foot
Kw_i = 0 where walkway not required
Kw_i = 1 where walkway required

Chord load due to ice load (each chord)

$$Pci = \frac{(ILt)\left(\frac{1}{2}S\right) + (ILs)(A_2)}{2U}$$

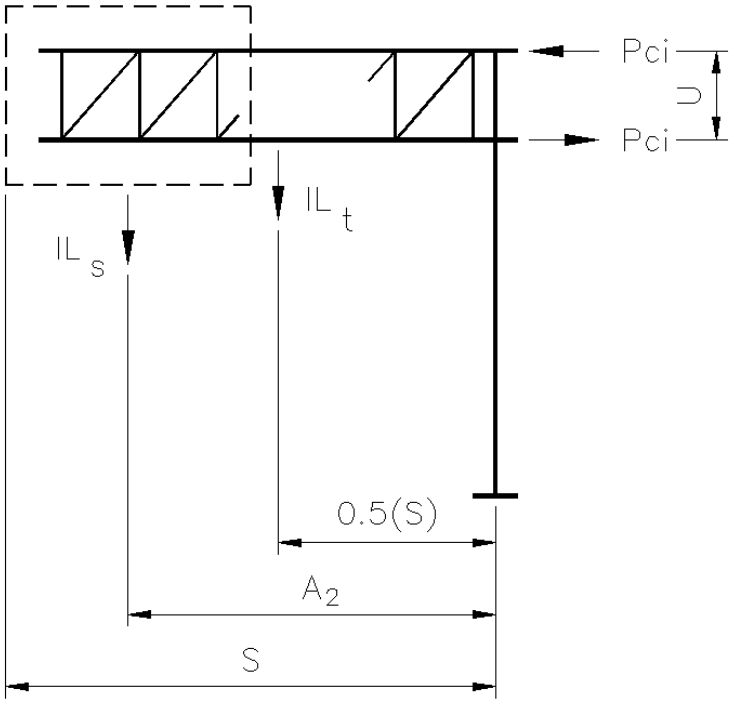

SOUTH CAROLINA LICENSED PROFESSIONAL ENGINEER
No. 35290
ROBERT R WIGINTON

Nov 8 2024

SOUTH CAROLINA LICENSED PROFESSIONAL ENGINEER
No. 38665
DAVID A LALLONE

Sep 8 2023

Group I (DL)

Chord Load (If $Kv_i = 0$, L = 2* U; if $Kv_i = 1$, L = U)

$Pc_I = Pcd$

Diagonals (vertical) L = 1.414 * U

$$Pdv_I = \frac{(DL_t + DL_s)(1.414)}{2}$$

Struts (vertical) L = U

$$Psv_I = \frac{DL_t + DL_s}{2}$$

Group II (DL + W)

Chord Load (If $Kv_i = 0$, L = 2 * U; if $Kv_i = 1$, L = U)

$$Pc_{II} = Pcd + \frac{M_h}{Y}$$

Diagonals (vertical) L = 1.414 * U

$Pdv_{II} = Pdv_I$

Struts (vertical) L = U

$Psv_{II} = Psv_I$

Diagonals (horizontal) $L = \sqrt{U^2 + Y^2}$

$$Pdh_{II} = \frac{(W_p + W_h)\,(U^2+Y^2)^{1/2}}{2Y}$$

Struts (horizontal) L = Y

$$Psh_{II} = \frac{W_p + W_h}{2}$$

Group III (DL + W/2 + IL)

Chord Load (If $Kv_i = 0$, L = 2 * U; if $Kv_i = 1$, L = U)

$$Pc_{III} = Pcd + Pci + \frac{M_h}{2Y}$$

Diagonals (vertical) L = 1.414 * U

$$Pdv_{III} = Pdv_I + \frac{(IL_t + IL_s)(1.414)}{2}$$

Struts (vertical) L = U

$$Psv_{III} = Psv_I + \frac{(IL_t + IL_s)}{2}$$

SOUTH CAROLINA PROFESSIONAL ENGINEER
No. 35290
ROBERT R WIGINTON

Nov 8 2024

SOUTH CAROLINA PROFESSIONAL ENGINEER
No. 38665
DAVID A LALLONE

Sep 8 2023

Group III (DL + W/2 + IL)

Diagonals (horizontal) $L = \sqrt{U^2 + Y^2}$

$Pdh_{III} = \frac{Pdh_{II}}{2}$

Struts (horizontal) $L = Y$

$Psh_{III} = \frac{Psh_{II}}{2}$

Note:

Interior diagonals are based on chord to diagonal with a 4:1 ratio.

Determine:

Chords	- using Pc_I, Pc_{II}, Mc_{II}, Pc_{III}, Mc_{III}
Vertical diagonals	- using Pdv_I, Pdv_{II}, Pdv_{III}
Horizontal diagonals	- using Pdh_{II}, Pdh_{III}
Vertical struts	- using Psv_I, Psv_{II}, Psv_{III}
Horizontal struts	- using Psh_{II}, Psh_{II}

SOUTH CAROLINA LICENSED PROFESSIONAL ENGINEER No. 35290 ROBERT R WIGINTON

Nov 8 2024

SOUTH CAROLINA LICENSED PROFESSIONAL ENGINEER No. 38665 DAVID A LALLONE

Sep 8 2023

Post Design **(**Group I not critical, check Group II & III for maximum conditions)

On cantilever structures, load combination 1, AASHTO Article 3.9.3, will always be critical since the resultant moment will be greater.

Group II - Combination 1 (DL+W)

W_v = Wind on Post

$= (\frac{\text{Post OD}}{12})(H)(0.00256)(G)(V)^2(C_d)(K_z)(I_r)$ Reference Sheet F3C

DL_p = Weight of Post

= (H)(Post Wgt) + Base PL + Conn PL

Mnc_{II} = Moment (normal component)

$= (W_p + W_h)(H - \frac{U}{2}) + (W_v)(\frac{H}{2})$

Mtc_{II} = Moment (transverse component)

$= (0.2)(Mnc_{II}) + (DL_s)(A_2) + (DL_t)(½S)$

Mr_{II} = Resultant Moment = $\sqrt{Mnc_{II}^2 + Mtc_{II}^2}$

T_{II} = Torsion = 2 M_h

P_{II} = Total Dead Load = $DL_s + DL_t + DL_p$

V_{II} = Shear = $W_p + W_h + W_v$

Group III - Combination 1 (DL+W/2+IL)

Mnc_{III} = Moment (normal component) = ½ Mnc_{II}

Mtc_{III} = Moment (transverse component)

$= (0.2)(Mnc_{III}) + (DL_s+IL_s)(A_2) + (DL_t+IL_t)(½S)$

Mr_{III} = Resultant Moment = $\sqrt{Mnc_{III}^2 + Mtc_{III}^2}$

T_{III} = Torsion = ½ T_{II}

P_{III} = Total Dead Load = $P_{II} + IL_t + IL_s + 3\pi(H)(\frac{\text{Post OD}}{12})$

V_{III} = Shear = ½ V_{II}

SOUTH CAROLINA PROFESSIONAL ENGINEER
No. 35290
ROBERT R WIGINTON
LICENSED

Nov 8 2024

SOUTH CAROLINA PROFESSIONAL ENGINEER
No. 38665
DAVID A LALLONE
LICENSED

Sep 8 2023

Determine: Post - using Mr, T, P, & V for each group as applicable

Anchor Bolt Design

Use loadings from Group II, (Maximum by inspection). See sheet F2C for material specifications.

Total shear per anchor bolt

Worst case if normal and transverse shear loads are superimposed with rotational shear load

$$V_{AB} = \sqrt{(Vnc + Vr)^2 + (Vtc + 0.2Vr)^2}$$

Where $Vnc = \frac{\text{Normal Shear}}{\text{No of Bolts}}$

$Vtc = 0.2 * (Vnc)$

$Vr = \frac{\text{Torque}}{(\text{No Bolts})(\text{Bolt Circle Dia})} \times \text{Cos}(\alpha)$ (α = angle Vr from Vnc)

Maximum axial load in anchor bolts

$P_{AB} = \frac{M(c)}{I_g} - \frac{\text{Dead Load}}{\text{No of Bolts}}$ where I_g = Inertia of bolt group

M = Mr_{II} or Mr_{III} , whichever is greater

Allowable Stresses

$F_v = 0.30\ F_y(j)$ (Eq 5.17.4.2-3) $F_t = 0.50\ F_y(j)$ (Eq 5.17.4.2-1)

Determine anchor thread diameter

$A_t = \frac{P_{AB}}{F_t}$ A_t = Actual tensile stress area required per bolt

A_{tt} = Tensile stress area for trial size bolt ($A_{tt} > A_t$)

Check for combined loading

$(f_v)^2 + (kf_t)^2 \le (F_v)^2$ $k = \frac{F_v}{F_t}$ $fv = \frac{V_{AB}}{A_{tt}}$ $ft = \frac{P_{AB}}{A_{tt}}$

Anchor bolt embedment length

Embedment length to be the greater of the development length for a non-contact lap splice if the anchor bolt is within 6" of the vertical reinforcement of the pedestal / cylinder or 20 anchor bolt diameters. Alternately the anchor bolt embedment will meet or exceed the requirements of Appendix D of ACI-318-08. All anchors bolts will have a nut at the bottom and be 55 ksi bolts unless otherwise specified. Note hooked anchor bolts only used if specified or required by job specifications.

SOUTH CAROLINA LICENSED PROFESSIONAL ENGINEER No. 35290 ROBERT R WIGINTON

Nov 8 2024

SOUTH CAROLINA LICENSED PROFESSIONAL ENGINEER No. 38665 DAVID A LALLONE

Sep 8 2023

Base Plate Design

Below is the standard base plate design that will be used unless otherwise specified or indicated on design printouts and/or drawings.

Use ASTM A709 Grade 50 Plate (F_y = 50,000 PSI)

Assume point of contraflexure midway between bolt and toe of weld.

$$e = \frac{BC - \text{Post Dia.} - 2 * 0.313}{4}$$

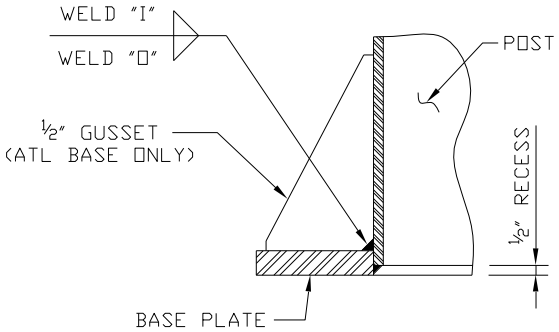

TYPICAL SECTION THRU BASE

Allowable Stresses

Plate: Fb = 0.75 F_y (j) (Eq 5.8-1)

Weld: Fv = 21.00 (j) AWS-2008 Table 2.3 page 25 - Ft_w = 70 ksi

Determine Plate Thickness

$M = (P_{AB})\ (e)$ $\quad b = \frac{\pi(\text{Bolt Circle})}{\text{No of Bolts}}$

$$S = \frac{M}{b * F_b}$$

$t = \sqrt{6\,S}$ (Base Plate thickness the greater of (t) or anchor bolt diameter)

Determine Weld Size

Design for Torque (T_{II} or T_{III}) + Moment (Mr_{II} or Mr_{III}) + Dead Load (DL) + Horiz Shear (V_{II}

$$f_v = \frac{Mr_{II} \text{ or } Mr_{III}}{0.6366(0.5)\pi(\text{Pipe OD})^2} + \frac{DL}{\pi(\text{Pipe OD})} \qquad f_t = \frac{T_{II} \text{ or } T_{III}}{\pi(\text{Pipe OD})^2} \qquad f_h = \frac{V_{II} \text{ or } V_{III}}{\pi[\text{Pipe OD}]}$$

$$f_r = \sqrt{f_v^2 + f_h^2 + f_t^2}$$

Strength of weld I; $\quad I = (\text{Pipe Thk} - 0.0625)(0.707)(F_v)(j)$

Size of weld O; $O = \frac{(f_r - I)}{(0.707)(F_v)(j)}$ use $\frac{5}{16}$" Minimum Weld

SOUTH CAROLINA LICENSED PROFESSIONAL ENGINEER No. 35290 ROBERT R WIGINTON

Nov 8 2024

Alternate Base Plate

If the required base plate exceeds 3" in thickness, the use of stiffeners extended beyond critical bending section will be used and the plate thickness re-sized, unless otherwise specified. Use weld on stiffeners in addition to weld I and weld O to develop base connection.

SOUTH CAROLINA LICENSED PROFESSIONAL ENGINEER No. 38665 DAVID A LALLONE

Sep 8 2023

Truss Connection to Post

Check Group II and Group III loadings and use maximum.
Use ½" plates for all stiffeners. OK by inspection.

Weld design

Plates "A" & "B" to post -

r = pipe radius in feet.
Weld Fv = 21000 psi (AWS-2008 Table 2.3 page 25 - Ft_w = 70000 psi minimum)
C = pipe circumference in inches

$$Prp_{II} = \frac{Mh}{r} + 2\,Pcd$$

$$Prp_{III} = \frac{Mh}{2r} + 2\,Pcd + 2\,Pci$$

Fillet weld size required for plate "A" (Weld one side)

$$\text{Fillet size} = \frac{Prp\,max}{(C)(0.707)(Fv)}$$ Use $\frac{1}{4}$" minimum fillet, unless otherwise specified, see printouts

Fillet weld size required for plate "B" (Weld one side)

$$\text{Fillet size} = \frac{Prp\,max}{2(C)(0.707)(Fv)}$$ Use $\frac{3}{16}$" minimum fillet, unless otherwise specified, see printouts

Plates "C" & "D" to chords -

Minimum length of plate "C" or "D" = Lp = Post OD + 6"

Pc max = Greater of Pc_{II} or Pc_{III}

$$\text{Fillet weld size required} = \frac{Pc\,max}{2(Lp)(0.707)(Fv)}$$ Use $\frac{3}{16}$" minimum fillet, unless otherwise specified, see printouts

Bolts at chords

Use $\frac{3}{4}$" ø ASTM A325-N bolts

A_1 = Bolt Area = 0.4418 sq. in.
Allowable shear stress for A325-N bolts = 19000 psi (AASHTO Table 10.32.3B)
Fv = (A_1) (19000) = 8394 lbs

Pb max = Greater of Pb_{II} or Pb_{III}

$$Pb_{II} = Pcd + \frac{Mh}{Y - 0.75} \qquad Pb_{III} = Pcd + Pci + \frac{Mh}{2\,(Y - 0.75)}$$

$$\text{Number of bolts required, } N = \frac{Pb\,max}{Fv}$$ Use 6 bolts minimum

SOUTH CAROLINA LICENSED PROFESSIONAL ENGINEER No. 35290 ROBERT R WIGINTON

SOUTH CAROLINA LICENSED PROFESSIONAL ENGINEER No. 38665 DAVID A LALLONE

Sep 8 2023

Nov 8 2024

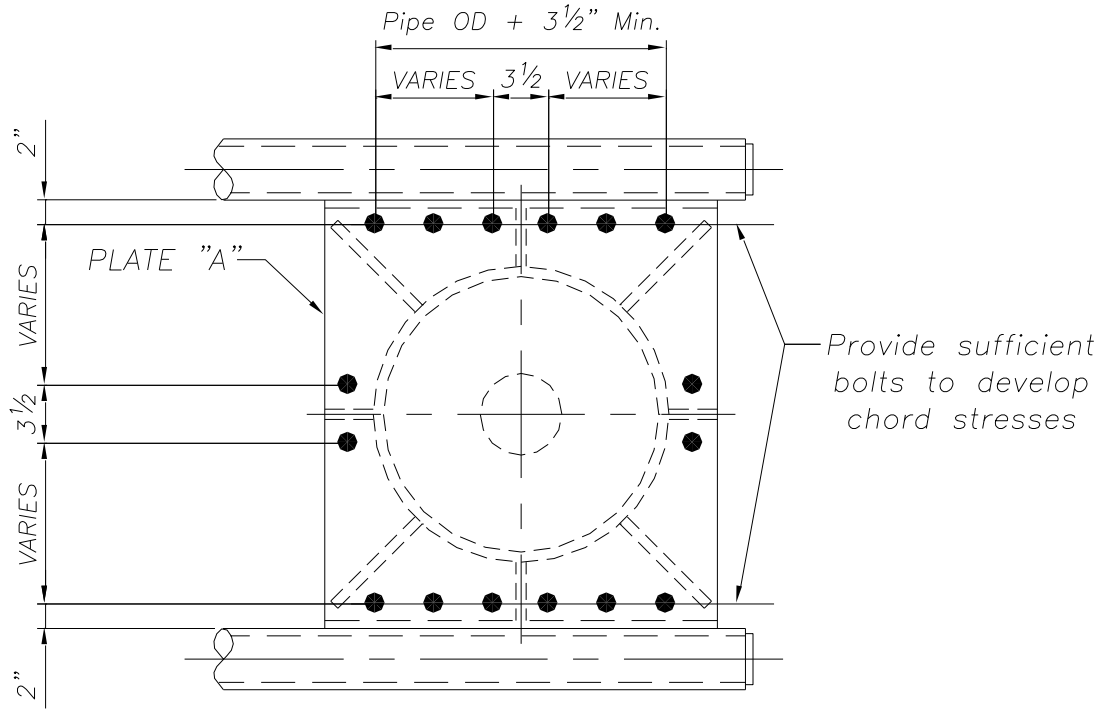

TOP CHORD

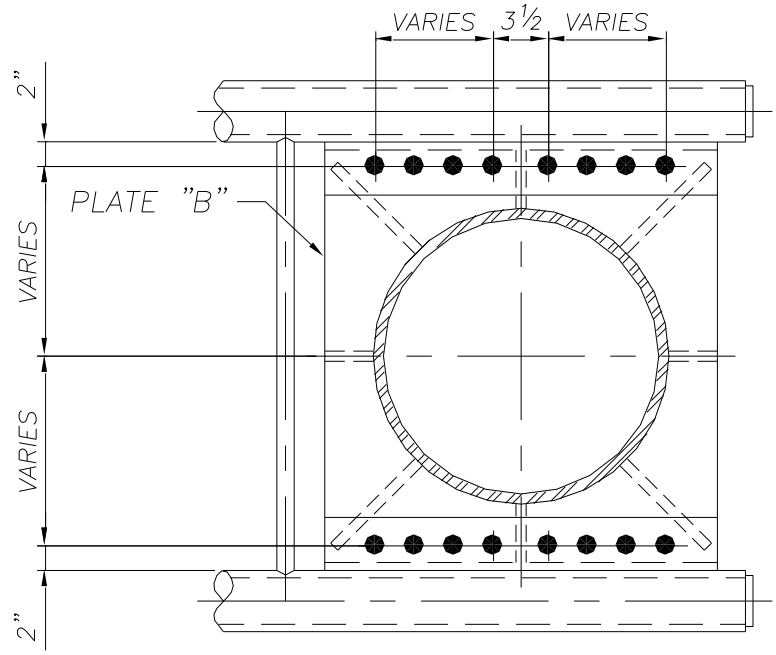

BTM CHORD



Nov 8 2024

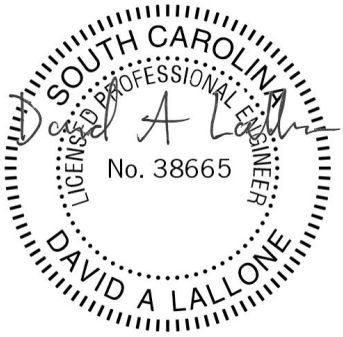

Sep 8 2023

Dead Load Deflection and Camber

Notes:

1. For dead load deflection and computed camber for cantilever structures, double the span length and apply loads symmetrically about centerline.
2. Tilt post away from roadway at erection by adjusting leveling nuts. Post to be vertical after deflection.
3. Permanent camber after deflection shall be at least 1", unless otherwise specified.

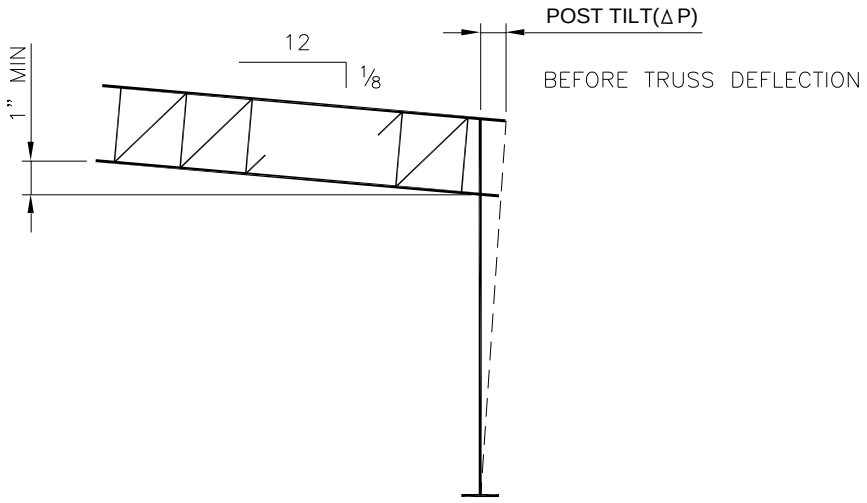

Nomenclature

S_1 = left span S_2 = right span
A = chord area
I_o = chord moment of inertia
U = truss depth
I = truss moment of inertia
C = camber
H = post height
M = moment at top of post

PDL = truss deflection due to post bending
E = modulus of elasticity
Wd_i = load at any point
A_i = distance to load point
ΔDL = truss dead load deflection
ΔP = post tilt
I_p = post moment of inertia

SOUTH CAROLINA LICENSED PROFESSIONAL ENGINEER No. 35290 ROBERT R WIGINTON

Nov 8 2024

Truss deflection due to dead load

$$\Delta DL = \frac{1728\left[\sum_{i=1}^{M} WD_i\, A_i\,(3S^2 - 4A_i^2) + \sum_{i=M+1}^{M} WD_i\,(S - A_i)\{3S^2 - 4(S - A_i)^2\}\right]}{6EI}$$

SOUTH CAROLINA LICENSED PROFESSIONAL ENGINEER No. 38665 DAVID A LALLONE

Sep 8 2023

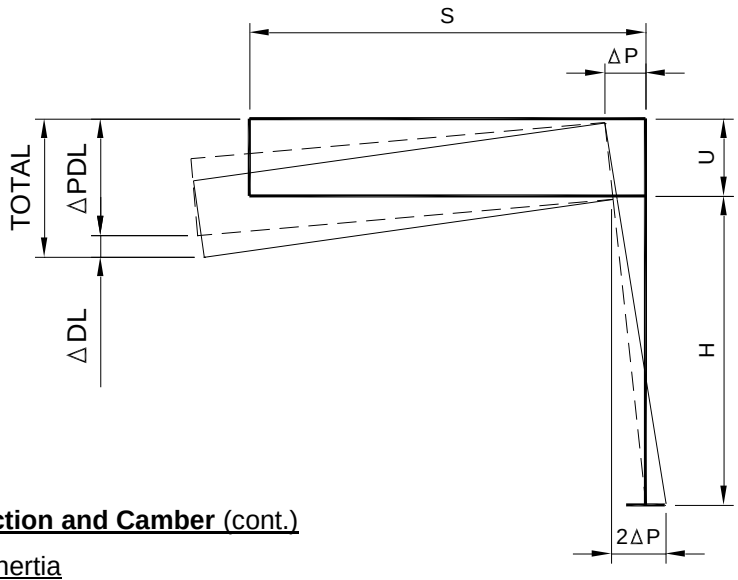

Dead Load Deflection and Camber (cont.)

Truss moment of inertia

$$I = 4(I_o) + 4(A)\left(\frac{U}{2}\right)^2$$

Post tilt

$$\Delta P = \frac{12(M)(H)^2}{2EI_p}$$

$$M = (DL_T)\ (\tfrac{1}{2}\ S) + (DL_S)(A_2) + (DL_W)(A_2)$$

Truss deflection due to post bending

$$\Delta PDL = \frac{2(\Delta P)(S)}{H}$$

Total dead load deflection

$$Total = \Delta DL + \Delta PDL$$

Camber Used

C_u = (S)(0.125 in/ft), unless otherwise noted on printouts and/or drawings

Permanent camber remaining

$C_p = C_u - \Delta DL$

SOUTH CAROLINA LICENSED PROFESSIONAL ENGINEER No. 35290 ROBERT R WIGINTON

Nov 8 2024

SOUTH CAROLINA LICENSED PROFESSIONAL ENGINEER No. 38665 DAVID A LALLONE

Sep 8 2023

Member selection - Steel Pipe

Increase in allowable unit stresses from Table 3.4-1, page 3-3.

j = 1.33 for Group II and Group III
k = 1.0 for web members and truss chords, unless otherwise specified.
k = 2.1 for post, unless otherwise specified.

Allowable unit stresses

Bending: (In terms of radius)

compact - Fb = 0.66 Fy (j); if $\left[\frac{Fy}{E}\left(\frac{R}{t}\right)\right] \le 0.063$

non-compact - $Fb = \left[0.39 + 0.017\frac{E}{Fy}\left(\frac{t}{R}\right)\right](Fy)(j)$; $if\ 0.063 < \frac{Fy}{E}\left(\frac{R}{t}\right) < 0.13$

non-compact - $Fb = \left[0.39 + 0.017\frac{E}{Fy}\left(\frac{t}{R}\right)\right](Fy)(j)$; $if\ 0.13 < \frac{Fy}{E}\left(\frac{R}{t}\right)$

Shear: (Section 5.11.1 – round) (Based on radius of pipe)

Fv = 0.33 Fy (j) ; when $\left(\frac{Fy}{E}\right)\left(\frac{R}{t}\right)^{\frac{3}{2}} \le 0.44$

$Fv = 0.145\ E\left(\frac{t}{R}\right)^{\frac{3}{2}}$; when $\left(\frac{Fy}{E}\right)\left(\frac{R}{t}\right)^{\frac{3}{2}} > 0.44$

Axial compression: (Section 5.10)

$Fa = \left[\frac{0.52\pi^2 E}{\left(\frac{kl}{r}\right)^2}\right](j)$; if $\frac{kl}{r} > \sqrt{\frac{2\pi^2 E}{Fy}}$

$Fa = \left\{0.52\,Fy - \left[\frac{0.13\,Fy^2}{\pi^2 E}\left(\frac{kl}{r}\right)^2\right]\right\}(j)$; if $\frac{kl}{r} < \sqrt{\frac{2\pi^2 E}{Fy}}$



Nov 8 2024

Actual stresses

$fa = \frac{P}{A}$ A = area of trial member

$fb = \frac{M}{S}$ S = section modulus of trial member

$fv = \frac{2V}{A} + \frac{(T)(12)}{2\pi R^2 t}$ R = radius to center of pipe wall

t = pipe thickness

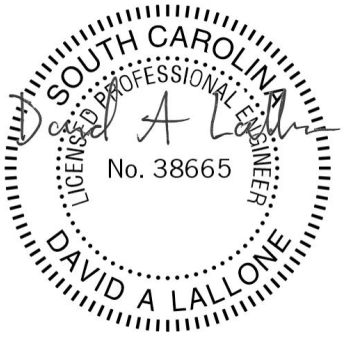

Sep 8 2023

Member selection - Steel Pipe (cont.)

Check for combined stresses. Below are the default CSR limits used unless noted in provisions.

For base of cantilever upright (Eq 5.12.1-1)

$$CSR = \frac{fa}{0.6Fy} + \frac{fb}{C_A Fb} + \left(\frac{fv}{Fv}\right)^2 \le 1.0$$

For connection end of cantilever truss (Eq 5.12.2.1-1)

$$CSR = \frac{fa}{0.6Fy} + \frac{fb}{Fb} + \left(\frac{fv}{Fv}\right)^2 \le 1.0$$

For intermediate points of truss chords (Eq 5.12.2.1-2)

$$CSR = \frac{fa}{Fa} + \frac{fb}{\left(1 - \frac{fa}{F'e}\right)Fb} + \left(\frac{fv}{Fv}\right)^2 \le 1.0 \quad \text{where,} \quad F'e = \frac{12\pi^2 E}{23\left(\frac{kL}{r}\right)^2}$$

For ends and intermediate points on chords where $\frac{fa}{Fa} \le 0.15$ (Eq 5.12.2.1-4)

$$CSR = \frac{fa}{Fa} + \frac{fb}{Fb} + \left(\frac{fv}{Fv}\right)^2 \le 1.0$$



Nov 8 2024

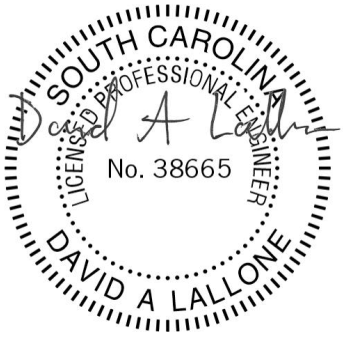

Sep 8 2023

Truss Splice Design (if required)

Below is the standard truss splice design that will be used unless otherwise specified or indicated on design printouts and/or drawings.

Design for the average of the maximum chord load and the strength of the member but not less than 75% of the strength of the member. (AASHTO 10.18.1)

Assume point of contraflexure midway between the bolt and toe of weld.
Use A709, Grade 50 Plate (Fy = 50000 psi)
Use ¼" minimum outside weld
Use A325 bolts (Ft = 38000 psi) (AASHTO Table 10.32.3B)
Bolt circle = OD + 3"(±)

Loads

$P_{TOT} = \frac{\text{Max Chord "Pc"}+(A)(Ft)}{2}$ or $(0.75)(A)(Ft)$, whichever is greater

$P = \frac{P_{TOT}}{\pi(OD)}$ kips / linear inch of circumference $\qquad e = \frac{BC - (OD + \frac{1}{2})}{4}$

M = P * e kips / linear inch of circumference

Allowable Stresses

Plate - Fb = 0.750 (Fy) (j)
Weld - Fv = 21.60 (j)
Pipe - Ft = 0.660 (Fy) (j)

f_t = Ft (A_t) (j) ; A_t = tensile stress area

No Req'd = $\frac{P_{TOT}}{f_t}$

Determine bolts

Determine plate thickness

$S = \frac{M}{Fb}$ in^3 / lin in of circum

$t = \sqrt{\frac{6\,S}{b}}$ b = 1" of circum

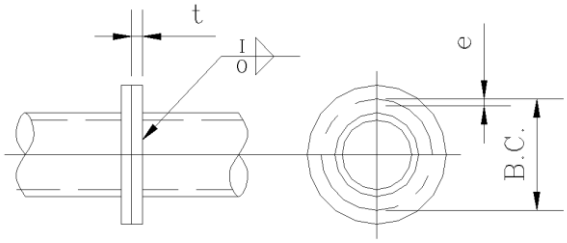

Determine weld

Iv = value of weld I = $\pi(OD)(\text{Pipe Thk})(0.707)(Fv)$

Size of weld O = $\frac{P_{TOT} - Iv}{\pi(OD)(0.707)(Fv)}$; ¼" minimum



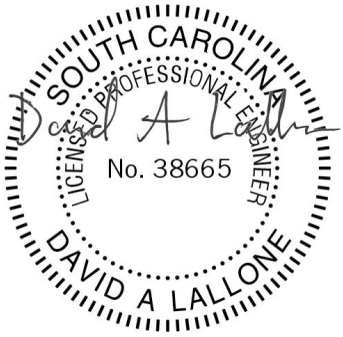

Nov 8 2024

Sep 8 2023

Vibration and Fatigue Design

Cantilevers shall be designed to resist the effects of vibration and fatigue according to Article 11.7 and modified by the fatigue importance factors in Article 11.6, Table 11.6-1, and page 11-5 of the specifications which states the structure should be checked for fatigue due to galloping, natural wind gusts and truck induced wind gusts.

Because Vibration and Fatigue is subject to ongoing research by AASHTO / NCHRP, values shown in design may be based on most current AASHTO specification.

Galloping

These structures consist of a quad-chord truss, which do not exhibit galloping due to stiffness from truss.

Natural wind gust

Each cantilever structure will be designed to resist a static natural wind gust pressure range of 5.2 (C_d) (I_f) according to Article 11.7.1.2. The pressure is applied to horizontal surface of the sign and the structure.

Truck induced wind gust

Each cantilever with walkway and variable message signs (VMS) shall be designed to resist the effects from truck induced wind gusts. The pressure range for truck induced gusts shall be 18.8 (C_d) (I_f) and adjusted for magnitude per Article 11.7.1.3 and is applied vertically to the horizontal surfaces of the sign, walkway and truss. The pressure is applied in the vertical direction to the horizontal surfaces of the sign, walkway, and truss. The pressure range shall be applied along any (12-ft) length to create maximum stress range, excluding any portion not directly over traffic lanes. Structures without VMS signs or walkway will be checked only when the diameter of the chords exceeds that of a 6" nominal size pipe.

SOUTH CAROLINA LICENSED PROFESSIONAL ENGINEER
No. 35290
ROBERT R WIGINTON

Nov 8 2024

SOUTH CAROLINA LICENSED PROFESSIONAL ENGINEER
No. 38665
DAVID A LALLONE

Sep 8 2023

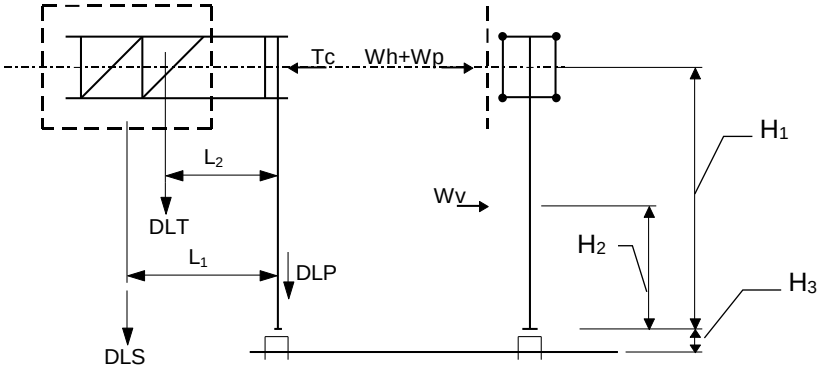

DLS = Weight of sign
DLT = Weight of truss
DLP = Weight of upright

Wh = Wind on truss
Wp = Wind on sign
Wv = Wind on upright
Tc = 0.2 (Wh + Wp + Wv)

NOTE: Loads in kips & dimensions in feet

SOUTH CAROLINA PROFESSIONAL ENGINEER
ROBERT R WIGINTON
No. 35290
LICENSED

Nov 8 2024

SOUTH CAROLINA PROFESSIONAL ENGINEER
DAVID A LALLONE
No. 38665
LICENSED

Sep 8 2023

CALCULATION OF FOOTING CORNER STRESSES

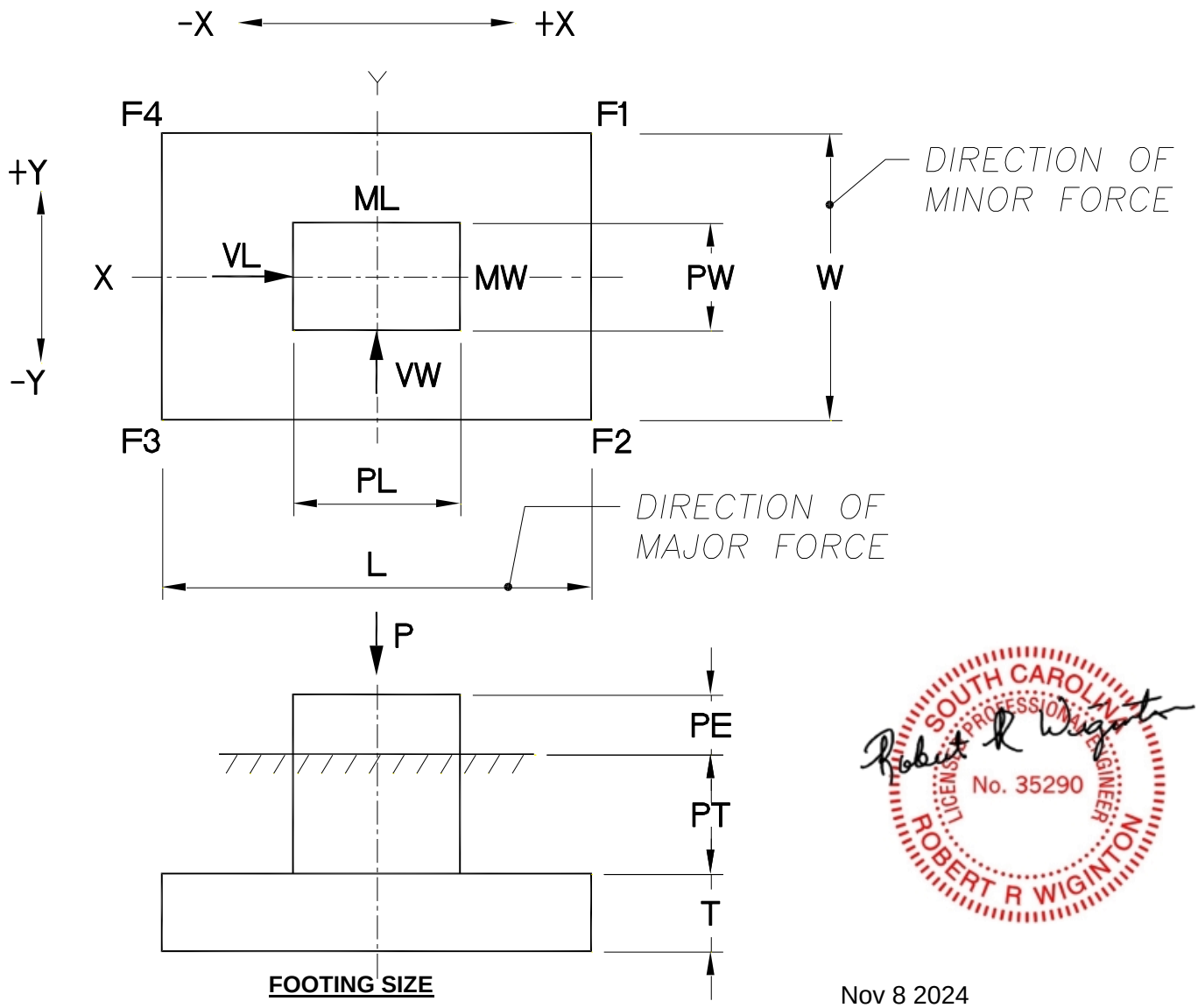

FOOTING SIZE

Wc = WEIGHT OF CONCRETE = 150 LBS / CUBIC FOOT ASSUMED

Ws = WEIGHT OF SOIL

INPUT VALUES ARE AT TOP OF PEDESTAL

SOUTH CAROLINA PROFESSIONAL ENGINEER
No. 35290
ROBERT R WIGINTON
LICENSED

Nov 8 2024

SOUTH CAROLINA PROFESSIONAL ENGINEER
No. 38665
DAVID A LALLONE
LICENSED

Sep 8 2023

Uncracked Section (No Tension)

$$F_i = \frac{P_t}{A} \pm \frac{Mx(y)}{Ix} \pm \frac{My(x)}{Iy}$$

P_s = weight of soil above pad
P_c = weight of concrete
P = weight of structure

Axial load at bottom of footing, $P_t = P + P_c + P_s$

Moments at bottom of footing

$Mx = Mw + Vw\ (T + PT + PE)$
$My = M_L + V_L\ (T + PT + PE)$

Footing corner stresses

$$F1 = \frac{P_t}{A} + \frac{Mx(y)}{Ix} + \frac{My(x)}{Iy}$$

$$F2 = \frac{P_t}{A} - \frac{Mx(y)}{Ix} + \frac{My(x)}{Iy}$$

$$F3 = \frac{P_t}{A} - \frac{Mx(y)}{Ix} - \frac{My(x)}{Iy}$$

$$F4 = \frac{P_t}{A} + \frac{Mx(y)}{Ix} - \frac{My(x)}{Iy}$$

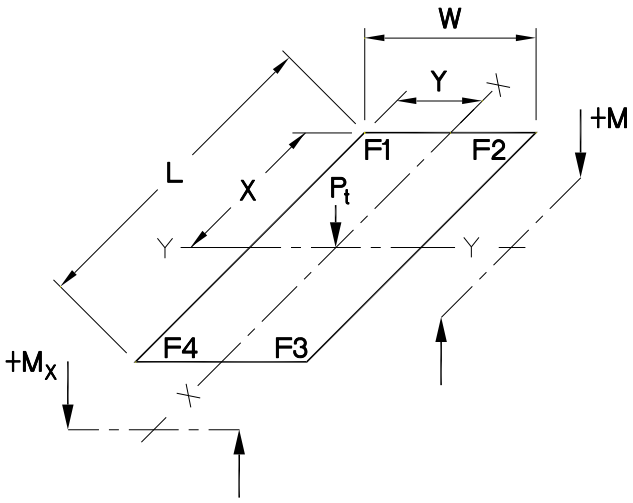

DESIGN MODEL AT BOTTOM OF FOOTING

Note: If F3 is negative (in tension), cracked section must be calculated

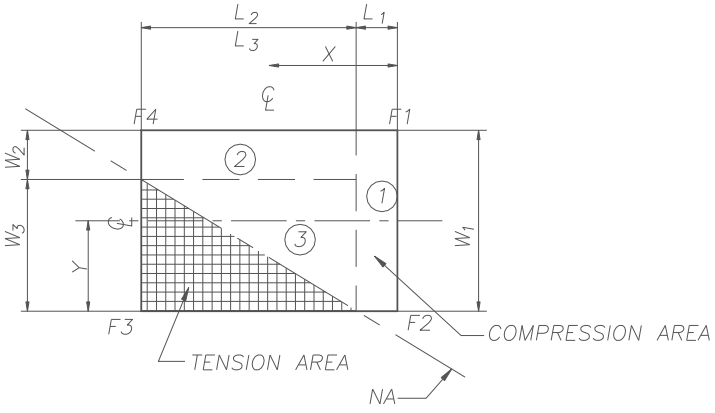

General Flexure Formula

$$F_i = \frac{P_t}{A} \pm \left[\frac{Mxc - Myc\left(\frac{Ixcyc}{Iyc}\right)}{Ixc - \frac{(Ixcyc)^2}{Iyc}}\right] Y' \pm \left[\frac{Myc - Mxc\left(\frac{Ixcyc}{Ixc}\right)}{Iyc - \frac{(Ixcyc)^2}{Ixc}}\right] X'$$

STRESS DIAGRAM - F3 NEGATIVE

Cracked Section - Case 1
Stresses are calculated at bottom of footing

SOUTH CAROLINA PROFESSIONAL ENGINEER
No. 35290
ROBERT R WIGINTON

SOUTH CAROLINA PROFESSIONAL ENGINEER
No. 38665
DAVID A LALLONE

Nov 8 2024

Sep 8 2023

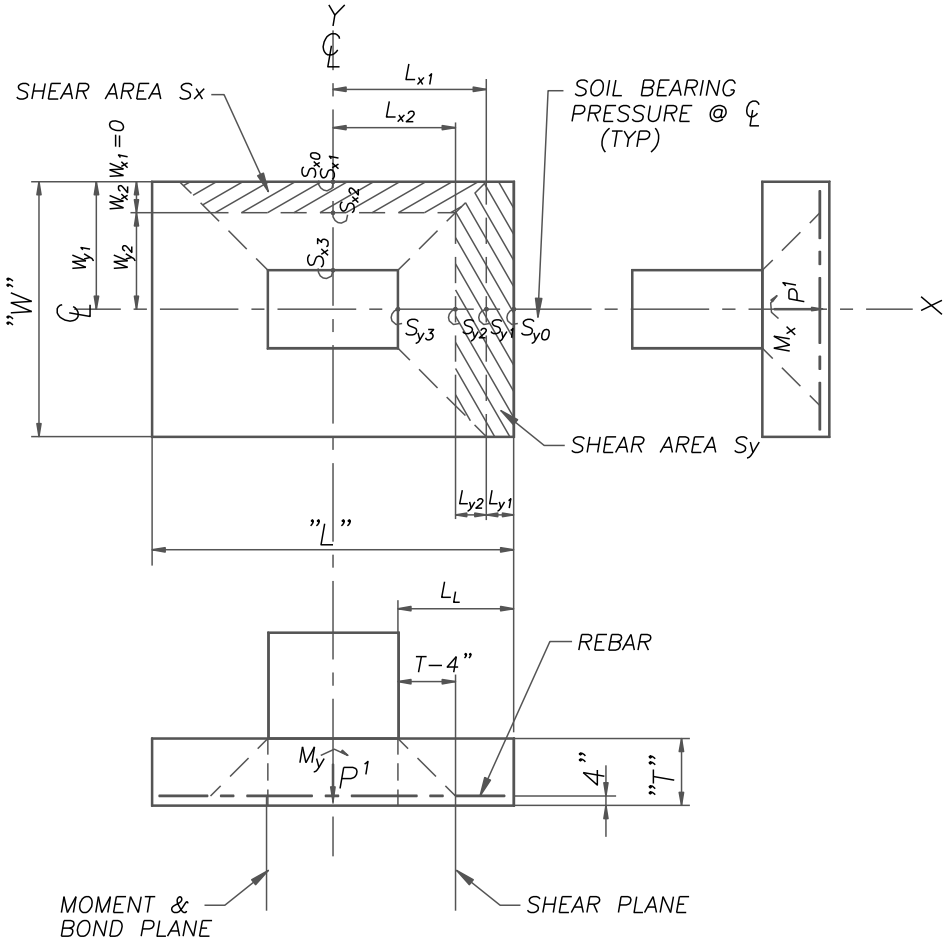

FOOTING MOMENT AND SHEAR MODEL

Uniform weight of concrete and soil, Pcs = (T) (Wc) + (PT) (Ws)

SOUTH CAROLINA LICENSED PROFESSIONAL ENGINEER No. 35290 ROBERT R WIGINTON

Nov 8 2024

SOUTH CAROLINA LICENSED PROFESSIONAL ENGINEER No. 38665 DAVID A LALLONE

Sep 8 2023

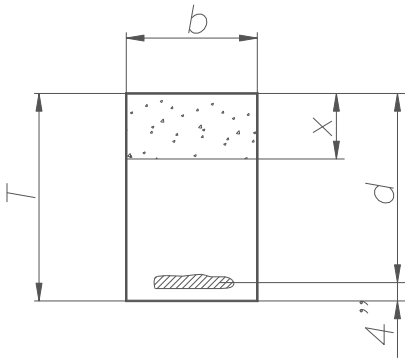

Use ASTM A615, Grade 60 rebar

Fy = 60 ksi f 'c = varies (psi)

Fs = 24 ksi $n = \frac{E}{57000\sqrt{f'c}}$

Increase allowable stresses 133%.

Trial:

Balance areas so that $x = \frac{3}{8}d$

Ms = Myy or Mxx

$Ast = \frac{12(Ms)}{(d - \frac{x}{3})(Fs)(1.33)}$ $ld_m = \frac{(0.05)(d_b)(Fy)}{\sqrt{f'c}}$

Check concrete stresses

Allowable stresses:

$f_{cr} = (0.4)(f'c)(1.33)$

$v_{cr} = (0.95\sqrt{f'c})(1.33)$

$p = \frac{Ast}{bd}$ $k = \sqrt{2np - (np)^2} - np$

$j = 1 - \frac{k}{3}$

Actual stresses:

$f_{ca} = \frac{12(Ms)}{(b)(k)(j)(d)^2(0.5)}$

$v_{ca} = \frac{Vs}{(b)(j)(d)}$

Vs = DTSy or DTSx



Nov 8 2024

Check development length (Bond)

$ld_r = \frac{Mt}{(2)(Vs)} + la$ (la = 0)

Mt = (Ast) (Fy) (0.85) (d)

ld_a = LL - 3" or WW - 3"

Recheck As

$As_r = \frac{(12)(Ms)}{(j)(d)(Fs)(1.33)}$

Note: The area of steel does not include the steel located in the top of pad. That steel is shown to account temperature only.

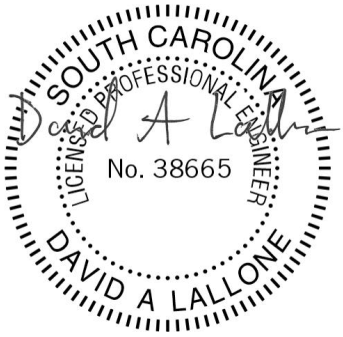

Sep 8 2023

DESIGN OF PEDESTAL WITH BI-AXIAL BENDING

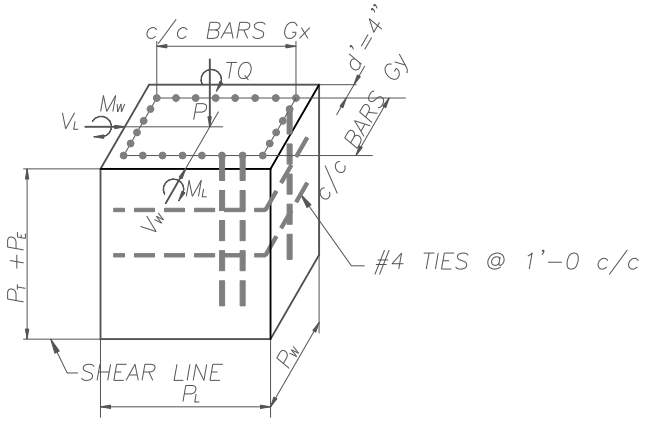

d' = 3"(cover) +
½ (#4 Tie) +
½ (½ of #8 bar) assumed +
4"

Minimum Reinforcement (1%)

Asm = (0.01) (PL) (PW) (144) in^2

DESIGN MODEL

Moments at base

My = M_L + V_L (PT + PE)
Mx = Mw + Vw (PT + PE)

Shear at base (acting on rebar only)

$V_1 = \sqrt{VL^2 + VW^2}$

$V_2 = \frac{TQ}{Gx} + \frac{TQ}{Gy}$

$V_t = V_1 + V_2$

Trial reinforcing (Assume #8 bar - 0.79 in^2)

$Qty = \frac{Asm}{0.79}$

Combined stress ratio

$CSR = \left(\frac{fv}{Fv}\right)^2 + \frac{fa}{Fa} + \frac{fbx}{Fbx} + \frac{fby}{Fby} \le 10$

Allowable stress (increase by 33%)

Fv = (0.33) (Fy) (1.33) = 26334 psi
Fa = (0.4) (f 'c) (1.33)
Fbx = Fby = (0.4) (f 'c) (1.33)

SOUTH CAROLINA PROFESSIONAL ENGINEER
No. 35290
ROBERT R WIGINTON

Nov 8 2024

SOUTH CAROLINA PROFESSIONAL ENGINEER
No. 38665
DAVID A LALLONE

Sep 8 2023

Actual Stress

$$fv = \frac{Vt}{Ast} \qquad fa = \frac{P}{Ag} \qquad fbx = \frac{(Mx)(Cx)}{Ix} \qquad fby = \frac{(My)(Cy)}{Iy}$$

Ast = area of reinforcement used
Ag = gross area of pedestal

$$Cx = \frac{PL}{2} \qquad Cy = \frac{PW}{2}$$

$$Ix = \frac{(PW)(PL)^3}{12} + \frac{(2n)(Ast)(Gx)^2}{6}$$

$$Iy = \frac{(PL)(PW)^3}{12} + \frac{(2n)(Ast)(Gy)^2}{6}$$

Since the pedestal is almost in pure bending (P load is negligible), the following stress ratio must be used.

$$CSM = \frac{Mx}{Mo_x} + \frac{My}{Mo_y} \leq 1.0$$

Mo_x = (0.40) (As) (Fy) (1.33) (PW - 2d')

Mo_y = (0.40) (As) (Fy) (1.33) (PL - 2d')

As = tension steel = $\frac{Ast}{4}$

Review CSR and CSM and adjust rebar size if required.

SOUTH CAROLINA PROFESSIONAL ENGINEER
No. 35290
ROBERT R WIGINTON

Nov 8 2024

SOUTH CAROLINA PROFESSIONAL ENGINEER
No. 38665
DAVID A LALLONE

Sep 8 2023

Check torque (Cantilever structures only)

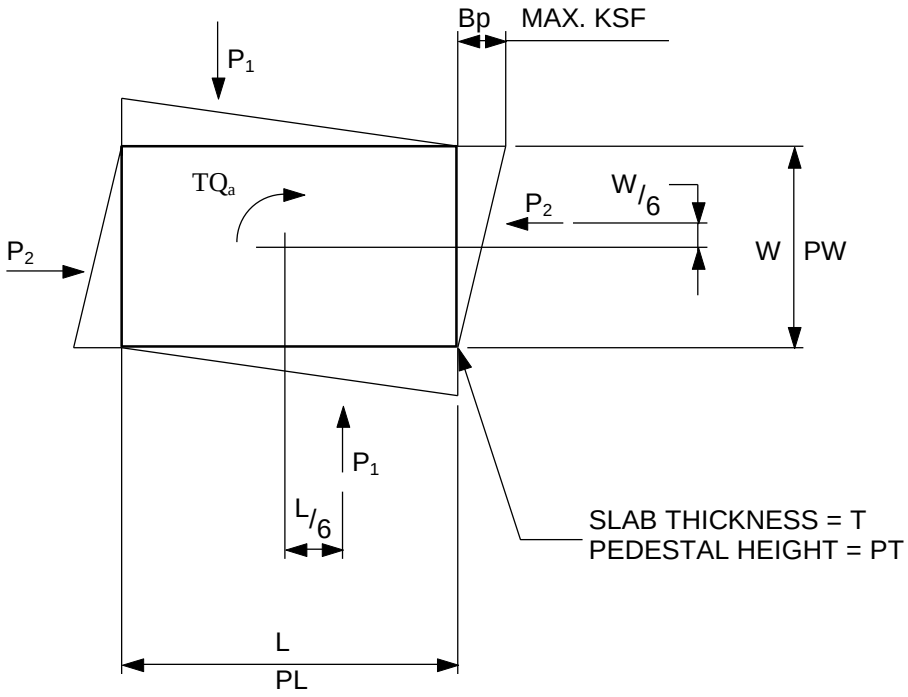

Bp = Maximum soil bearing pressure

P_1 = (0.5) (Bp) (L) (T)

P_2 = (0.5) (Bp) (W) (T)

Maximum torque allowable for footing size

$$TQ_m = (2)(P_1)\left(\frac{L}{6}\right) + (2)(P_2)\left(\frac{W}{6}\right)$$

Calculate torque allowable on pedestal same as above.

TQ_a = actual torque from structure printout

If $TQ_a > TQ_m$ increase footing size or thickness

SOUTH CAROLINA PROFESSIONAL ENGINEER
No. 35290
ROBERT R WIGINTON

Nov 8 2024

SOUTH CAROLINA PROFESSIONAL ENGINEER
No. 38665
DAVID A LALLONE

Sep 8 2023

NOTE: Loads in kips, dimensions in feet

$M_{DL} = (DLS)(L_1) + (DLT)(L_2) + (tc)(H_1)$

$M_{WL} = (WH+WP)(H_1) + (WV)(H_2)$

$P_{WL} = WH + WP + WV$

$$\text{Eff H} = \frac{M_{WL}}{P_{WL}}$$

Use Eff H to determine Eff P_{DL}

$$\text{Eff } P_{DL} = \frac{M_{DL}}{\text{Eff H}}$$

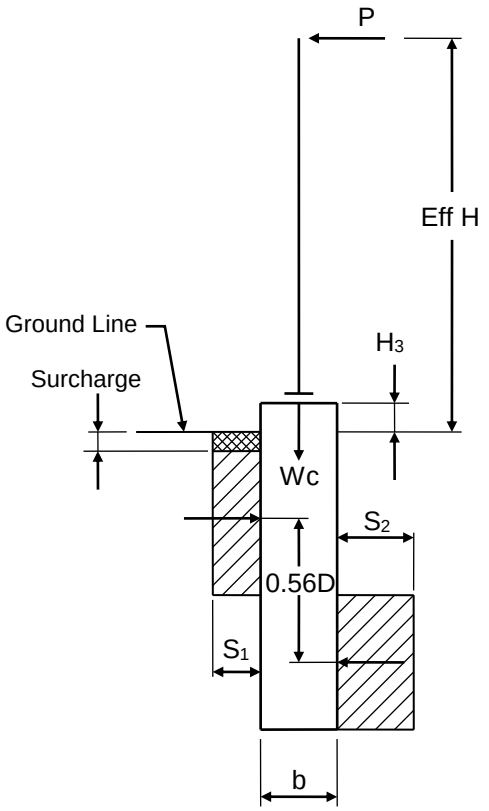

RESULTANT

$$P = \sqrt{(P_{DL})^2 + (P_{WL})^2}$$

$$D = \frac{2.37\,P + \sqrt{5.617\,P^2 + 10.56\,(S_1\,b * P * H)}}{2\,S_1\,b}$$

REINFORCING

MR = P (Eff H)

Fy = Rebar yield (KSI)
Ab = Area of single bar (in^2)
As = Req'd area of reinforcement (in^2)
D_1 = Diameter of rebar cage (in)
J = 1.33 for Group II only

$$As = \frac{12\,(MR)}{0.12\,(Fy)\,(D_1)\,(J)} \geq 1\%\ \text{Cylinder Area}$$

$$\text{Number of Bars req'd} = \frac{As}{Ab}$$

$$\text{Spacing} = \frac{\pi\,D_1}{\text{No of bars}}$$

The use of #4 hoops @ 1'-0 (±) c /c will be used for cylinder diameters 4 ft and less. All cylinders larger than 4 ft will used #5 hoops, unless otherwise specified on the printouts.



Nov 8 2024

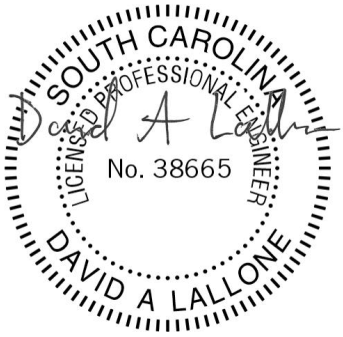

Sep 8 2023

TORSION WINGS

(If Required)

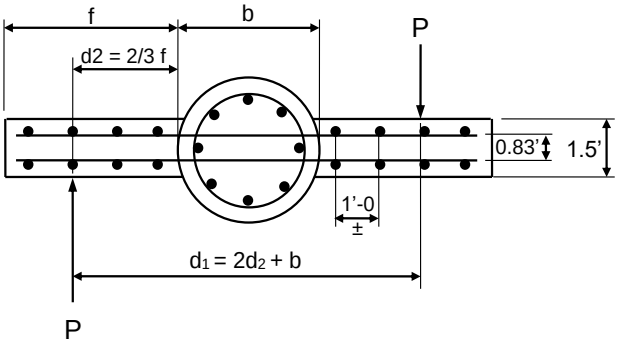

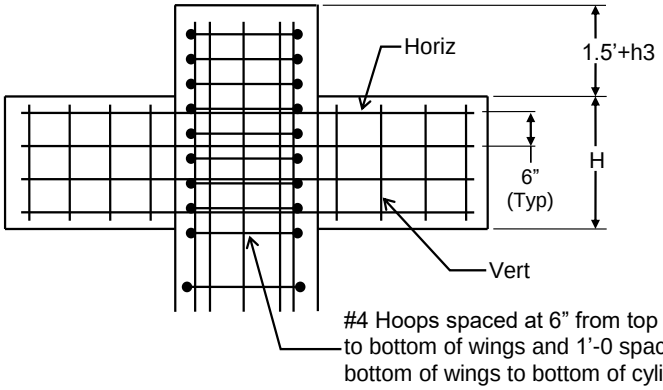

$$P = \frac{\text{Torque}}{d_1}$$

$$H = \frac{2\,P}{f\,S_1}$$

Reinforcing

$MR = (P)(d_2)$

$$As = \frac{12\,(MR)}{(24)(0.86)(d_3)(J)}$$

$$\text{Number of horizontal bars required} = \frac{As}{Ab}$$

Horizontal bars at 6" c/c each side and #4 vertical bars at 1'-0 (±) c/c each side, unless otherwise specified on the design printouts.

SOUTH CAROLINA LICENSED PROFESSIONAL ENGINEER No. 35290 ROBERT R WIGINTON

Nov 8 2024

SOUTH CAROLINA LICENSED PROFESSIONAL ENGINEER No. 38665 DAVID A LALLONE

Sep 8 2023

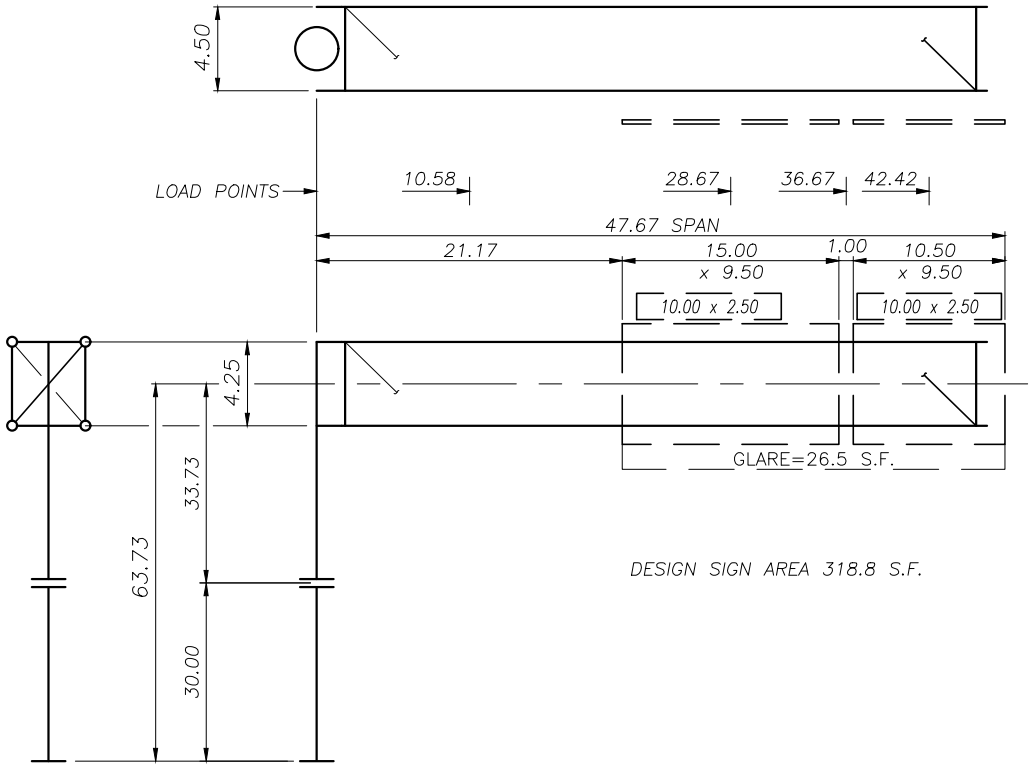

DESIGN SIGN AREA 318.8 S.F.

16 – 2.50"ø ANCHOR BOLTS

STR NO: OH–23
STA NO: 5423+81.11(EB)

CHORDS	4.500 x 0.237
VERTICAL DIAGONALS	1.660 x 0.140
VERTICAL STRUTS	1.660 x 0.140
HORIZ STRUTS & DIAG'S	1.900 x 0.200
POST	36.000 x 0.750



Nov 8 2024

Box Truss Cantilever Structure Design

Reference Walpar Job Number : C3546
Reference Design Information Sheet Number : C7 Structure : OH-23 Station : 5423+81.11(EB)
State : SC
AASHTO Specification : 6th Edition Fatigue Category : I
Design Wind Velocity (V) : 100 mph

Structure Dimensions

Span (S)	47.67 ft	Truss Hgt (U)	4.25 ft	Truss Depth (Y)	4.50 ft
Post Hgt (H)	63.73 ft	Coeff of Hgt (Kz)	1.16		
Dist to Post Splice	30.00 ft				

Sign Information

Actual Sign Area: 318.75 sq ft

Z Ecc to bottom of glare screen

Sign	Load (i)	Lgth (B_i)	Hgt (D_i)	Location (a_i)	Unit wgt	Depth	C_d	Z Ecc	Area	Exit Panel
1	2	15.00	9.50	28.67	7.00		1.14	5.75	183.00	X
2	4	10.50	9.50	42.42	7.00		1.13	5.75	135.75	X

Walkway Information

	Lgth	Location	Width	Unit wgt	Y Ecc
WW1	29.00	33.17	2.54	60	5.57
WW2					

Load Summary Estimate

Weight of truss only	3668 lbs
Weight of truss with signs	5900 lbs
Post weight †	20563 lbs

† includes additonal wgt from base plate



Nov 8 2024

0

C7 - 1 of 7

Walpar (c) 2014

Box Truss Cantilever Structure Design

Job No : C3546 Structure No : OH-23 Station : 5423+81.11(EB)

Loads

Unit wind load on sign(s)/C_d: 33.85 psf Unit wind load on exposed truss: 40.62 psf Unit wgt of truss: 64.35 plf Unit ice wgt on truss: 24.27 plf

Truss Area for Wind Load (A_t): 1.06 sq ft / ft ***All loads in charts in lbs, ft or ft-lbs unless noted**

Truss Load Summary For Actual Sign & WW Condition

	Load (i)	Dead	Wind (W_p & W_h)	Ice
Sign and Truss Loads	1	1362	915	514
	2	2246	7047	913
	3	64	43	24
	4	1626	5193	662
WW Loads	WW1	1740	719	774
Post Reaction (R_1)		7039	13917	2887
Truss Moments (M)		207843	457385	86251

** WW/Equipment Loads are incorporated into Sign and Truss Loads to determine Reactions and Moments.

Post Loads

Dead	Wind	Ice	Group II t_c	Group III t_c
19900	1684	1862	337	505

Load Combinations for Design Sign Area (Max Condition)

Truss Member Loads	DL	DL +WL	DL+1/2 WL+IL
Truss Chords (Pc)	24452	75273	60010
Vertical Diagonals (Pv)	10614	10614	15353
Horizontal Diagonals (Ph)	4428	10714	5933
Vertical Struts (Psv)	7130	7444	10312
Horizontal Struts (Psh)	3823	6958	5664

Serviceability Requirements

Truss DL Deflection	0.90 in.
Total DL Deflection	3.82 in.
Limit for Deflection	3.81 in.
Camber Used (Cu)	5.96 in.
Permanent Camber (Cp)	5.06 in.
Post Tilt	2.08 in.
Post Deflection Limits	10.76 in.
D^2/400 Limit	3.31 in.
Horizontal WL Deflection	7.94 in.
Horizontal Defl Limits	14.30 in.

	Post Loads					
	M_N	M_{tc}	M_z/Torsion	V_N	V_{tc}	Axial
Group II Comb. 1 (DL+WL)	998723	405042	466443	15660	3120	26938
Group III Comb. 1 (DL+1/2WL+IL)	499605	392693	233222	7860	1560	31687
Group II Comb. 2 (DL+WL)	597825	503641	306823	9420	4680	26938
Group III Comb. 2 (DL+1/2WL+IL)	301913	441993	153412	4739	2340	31687



Nov 8 2024

0

C7 - 2 of 7

Walpar (c) 2014

Box Truss Cantilever Structure Design

Job No : C3546 Structure No : OH-23 Station : 5423+81.11(EB)

Material Information

	Pipe Size (Min Yield)	Unbraced Lgth	CSR Group II	CSR Group III
Truss Chords	4.500 x 0.237 (52 ksi)	9.38 ft	0.76	0.61
Vertical Diagonals	1.660 x 0.140 (52 ksi)	6.33 ft	0.51	0.74
Vertical Struts	1.660 x 0.140 (52 ksi)	4.25 ft	0.52	0.72
Horizontal Diagonals	1.900 x 0.200 (52 ksi)	6.50 ft	0.84	0.47
Horizontal Struts	1.900 x 0.200 (52 ksi)	4.50 ft	0.28	0.23
Upper Post	36.000 x 0.750 (52 ksi)	35.85 ft	0.26	0.16
Lower Post	36.000 x 0.750 (52 ksi)	30.00 ft	0.44	0.25

Structure Input (For Foundation Designs)

Sign DL React (DLS)	3.97 k
Truss DL React (DLT)	3.07 k
Post DL React (DLP)	19.90 k
Truss WL React (Wh)	0.96 k
Truss WL React (Wp)	12.44 k
Post WL React (Wv)	1.68 k
Dist. To DLS & Wp (L1)	34.52 ft
Distance To Wh (L2)	23.83 ft
Distance To Rh (H1)	63.73 ft
Distance To Wv (H2)	32.93 ft
Torque at Base (Mt)	466.4 k-ft
Min Ped Wth (PL & PW)	5.00 ft

Structure Detail Information

Truss to Post Connection

Connection Bolt Qty & Size	12 - ¾" ø A325
Connection Plate Weld "A"	¼ fillet
Connection Plate Weld "B"	3/16 fillet
Connection Plate Welds "C"&"D"	3/16 fillet

Truss Chord Splices

Maximum Design Load at Splice	92038 lbs
Splice Moment (per in. of circum)	4069 in-lbs
Splice Bolt Circle	7.5 in.
Splice Bolt Qty & Size	4 - 7/8" ø A325
Splice Plate Thickness	0.75 in.
Splice Plate Weld	¼ fillet

Post Detail

Maximum Anchor Bolt Pullout	75297 lbs
Anchor Bolt Circle	42 in. Dia
Anchor Bolt Yield	55 ksi
Anchor Bolt Qty & Size	16 - 2.5" ø
Anchor Bolt Length (Embed Used)	4.92 ft (3.75 ft)
Anchor Bolt CSR	0.30
Base Plate Thickness	2.5 in.
Base Plate Weld	5/16 fillet
Gusset Plates at Base	16-½" x 12"
Moment at Post Splice	596866
Splice Plate Bolt Circle	42 in. Dia
Splice Bolt Qty & Size	28 - 1.5" ø A325
Lower Splice Plate Thickness	2 in.
Lower Splice Plate Weld	5/16 fillet

ACI 318 App D checked with Min. Req'd Embed 2.54 ft

Upper Splice Plate Thickness 2 in.

Upper Splice Plate Weld 5/16 fillet

Sign Hanger Detail

Design hanger spacing 9.00 ft

Sign Hanger U-Bolt type ASTM-A307

SIGN	Max UBL at End	Max Spacing	Hanger U-Bolt	Sign Hanger	Hanger Support
1	3.63 ft	9.00 ft	2 - ½" ø	L5x3x5/16	W6x9
2	3.63 ft	9.00 ft	2 - ½" ø	L5x3x5/16	W6x9



Nov 8 2024

0

C7 - 3 of 7

Walpar (c) 2014

Box Truss Cantilever Structure Design

Job No : C3546 Structure No : OH-23 Station : 5423+81.11(EB)

Vibration and Fatigue (Per AASHTO 6th Edition)

Natural Wind Gust Load on Signs/C_d 5.20 psf
Natural Wind Gust Load on Truss 6.24 psf

Truck Induced Gust Load on Truss 18.91 psf
Extent of Truck Induced Gust 12.00 ft
Truss Area for Truck Induced Gust 1.08 sq ft / ft
Location of Center of Truck Induced Gust 41.67 ft

Truss Load Summary for Vibration and Fatigue

Loads (i)	NWG(i)	TIG(i)
1	141	
2	991	
3	7	20
4	733	244
WW1	345	624
Post Reaction	2216	889
Maximum Moments	72662	36177

Member Forces for Vibration and Fatigue

Truss Members	P_{NWG}	P_{TG}
Truss Chords	8074	4256
Vertical Diagonals	-	661
Horizontal Diagonals	1600	-
Vertical Struts	-	444
Horizontal Struts	1108	-

	Post Loads at Base				
	M_N	M_Y	M_z/Torsion	V_N	Axial
Natural Wind	170955	-	72662	2848	-
Truck Induced Gust	-	36177	-	-	889

Vibration and Fatigue Stresses

	NWG (ksi)	TIG (ksi)	Allowable (ksi)
Post/Truss Connection	1.14	0.60	2.60
Truss Vertical Diagonals	-	0.66	1.20
Truss Horizontal Diagonals	1.04	-	1.20
Truss Vertical Struts	-	0.66	1.20
Truss Horizontal Struts	1.04	-	1.20
Post Base Connection	1.90	0.40	7.00
Base Stiffener Termination	2.86	0.61	7.00
Anchor bolts	6.40	1.38	7.00



Nov 8 2024

0

Walpar (c) 2014

Box Truss Cantilever Structure Design

Job No : C3546 Structure No : OH-23 Station : 5423+81.11(EB)

Foundation Design

Boring Type SPT Boring Designation G-014
Major Soil Type Cohesionless Depth to Water 9.6 ft Surcharge (Frost) Depth 2 ft
Ground Slope 12:1 Consider slope stability? Y

SOIL TYPES	
01-GP	07-SM
02-GW	08-ML
03-GM	09-MH
04-GC	10-SC
05-SP	11-CL
06-SW	12-CH

Soil Properties

Depth	N Value	γ' (pcf)	Φ (deg)	S_u (lbf/ft^2)	α	β	f_{SN} (lbf/ft^2)	$(N_1)_{60}$	Soil Type
**0 - 4	18	115	37	2250	0.55		1238	36	10
4 - 8	20	116	37	2500	0.55		1375	40	10
8 - 9.6	10	110	34	1250	0.55		688	20	10
9.6 - 11.3	10	60	34	1250	0.55		688	20	10
11.3 - 25	10	60	32	1250	0.55		688	14	10

* Soil Type 13 indicates rock layer with N>60 for cohesionless soil or N>40 for cohesive soils

Soil Bearing Capacity for Spread Footing Design

Footing width, B 13.00 ft
Footing length, L 26.00 ft
Eccentricity, e_L 3.46 ft
Eccentricity, e_B 1.49 ft
Effective ftg width, B' 10.03 ft
Effective ftg width, L' 19.08 ft

Total wgt of load, foundation and soil, Pt 262.87 k
Normal moment, ML 909.29 ft-k
Transverse moment, Mw 390.81 ft-k
Distance from ground to bottom of footing, d_{min} 4.96 ft
Distance from ground to bottom of footing, D_f 5.50 ft
Distance to ground water from bottom of ftg, z_w 4.64 ft
Overburden pressure at base of footing, q 0.47 ksf
Weighted average soil unit weight, γ 77 pcf

Ultimate bearing capacity, q_{ult} 130.24 ksf
Allowable Bearing Capacity 43.25 ksf
Bearing Capacity used *** 2.00 ksf

***Note: Bearing capacities greater than 4.0 ksf will rarely effect spread footing pad size



Nov 8 2024

0

C7 - 5 of 7

Walpar (c) 2014

Box Truss Cantilever Structure Design

Job No : C3546 Structure No : OH-23 Station : 5423+81.11(EB)

Cantilever Spread Footing Design

Material/Soil Specifications and Safety Factors

Concrete f'_c :	3000 psi	Concrete wgt :	150 pcf
Rebar yield f_y :	60000 psi	Rebar F_s :	24000 psi
Soil Bearing Capacity :	2000 psf	Soil unit wgt :	110 pcf

Load Safety Factor[1] : 1.15

Loads and Locations From Structure

Sign DL React (DLS)	3.97 k	Distance to DLS & Wp (L1)	34.52 ft
Truss DL React (DLT)	3.07 k	Distance to Wh (L2)	23.83 ft
Post DL React (DLP)	19.90 k	Distance to Rh (H1)	63.73 ft
Truss WL React (Wh)	0.96 k	Distance to Wv (H2)	32.93 ft
Truss WL React (Wp)	12.44 k	Torque at Base (M_t)	466.4 ft-k
Post WL React (Wv)	1.68 k	Min Ped Width (PL/PW)	5.00 ft

Loads at Top of Pedestal from Structure

Axial load (P)	26.94 k		
Moment (ML)	909.29 ft-k	Moment (Mw)	390.81 ft-k
Shear (VL)	15.08 k	Shear (Vw)	3.00 k

Final Spread Footing Design Sizes

Pad Length (L)	26.00 ft	Pedestal Width/Length	6.00 ft (PW/PL)
Pad Width (W)	13.00 ft	Pedestal Projection	1.00 ft (PE)
Pad Thickness (T)	1.50 ft	Ground line to Top of Pad	4.00 ft (PT)

Reinforcement

Pad	Pedestal
Top Each Way - #4 Bars @ 12" o.c.	44 - #8 Vertical Bars Equally Spaced
X Direction - 13 - #11 Bars @ 12" o.c.	6 - #5 Ties @ 10.6" o.c.
Y Direction - 26 - #4 Bars @ 12" o.c.	

Serviceability	Quantities
7.16% of footing in uplift	3918 lbs of reinforcement
Safety factor against overturning = 59.67	25.44 cyd of concrete

Uncracked Section Calculations

Wgt of soil above pad (Ps)	132.88 k		
Wgt of concrete (Pc)	103.05 k	Total Area (A)	338.00 ft²
Total Load (Pt)	262.87 k		
X	13.00 ft	Y	6.50 ft
Ix	4760.17 ft⁴	Iy	19040.67 ft⁴
Mx	471.84 k-ft	My	1158.42 k-ft

Corner Stresses [Factored loads[1] (unfactored loads)]

F1	2.21 ksf (2.03 ksf)
F2	0.92 ksf (0.91 ksf)
F3	-0.66 ksf (-0.47 ksf)
F4	0.63 ksf (0.65 ksf)

Cracked Section Calculations [Factored loads[1] (unfactored loads)]

A1	183.88 ft² (219.75 ft²)	L1	14.14 ft (16.90 ft)	W1	13.00 ft (13.00 ft)
A2	76.62 ft² (69.87 ft²)	L2	11.86 ft (9.10 ft)	W2	6.46 ft (7.68 ft)
A3	38.75 ft² (24.19 ft²)	L3	11.86 ft (9.10 ft)	W3	6.54 ft (5.32 ft)
A'	299.25 ft² (313.81 ft²)				
Xc	1.17 ft (0.77 ft)	X1	5.93 ft (4.55 ft)	Y1	0.00 ft (0.00 ft)
Yc	0.56 ft (0.36 ft)	X2	-7.07 ft (-8.45 ft)	Y2	3.27 ft (2.66 ft)
		X3	-5.10 ft (-6.94 ft)	Y3	-2.14 ft (-2.95 ft)

Ixc	3533.84 ft⁴ (3996.37 ft⁴)
Iyc	15471.92 ft⁴ (16484.40 ft⁴)
Ixcyc	-1627.79 ft⁴ (-1195.14 ft⁴)
Mxc	324.75 ft-k (314.51 ft-k)
Myc	850.42 ft-k (805.35 ft-k)
X'	14.17 ft (13.77 ft)
Y'	7.06 ft (6.86 ft)

Corner Stresses [Factored loads[1] (unfactored loads)]

F1	2.56 ksf (2.18 ksf)
F2	0.96 ksf (0.94 ksf)
F3	-0.81 ksf (-0.51 ksf)
F4	0.80 ksf (0.73 ksf)



Nov 8 2024

0

Walpar (c) 2014

Box Truss Cantilever Structure Design

Job No : C3546 Structure No : OH-23 Station : 5423+81.11(EB)

Cantilever Spread Footing Design (cont.)

Moment and Shear Calculation Results

L_{x1}	6.50 ft	W_{x1}	0.00 ft	S_{y1}	1.32 ksf	S_{x1}	1.68 ksf
L_{x2}	4.17 ft	W_{x2}	2.33 ft	S_{y2}	1.16 ksf	S_{x2}	1.39 ksf
L_{y1}	6.50 ft	W_{y1}	6.50 ft	S_{y3}	1.08 ksf	S_{x3}	1.25 ksf
L_{y2}	2.33 ft	W_{y2}	4.17 ft	Pcs	0.67 ksf		
				DTS_y	10.60 k	DTS_x	2.60 k
				M_{YY}	43.50 ft-k	M_{XX}	5.33 ft-k

Reinforcement Calculations

f_{cr} : 1596 psi v_{cr} : 69 psi n : 9.29

b : 12.00 in d : 14.00 in x : 5.25 in

About Y Axis		About X Axis	
p :	0.0079	p :	0.0018
k :	0.32	k :	0.17
j :	0.89	j :	0.94
f_{ca} :	1564 psi	f_{ca} :	345 psi
v_{ca} :	71 psi	v_{ca} :	16 psi
Mt :	953216 in-lb	Mt :	116820 in-lb
ld_r :	44.97 in	ld_r :	22.47 in
ld_a :	117.00 in	ld_a :	39.00 in
ld_{min} :	75.31 in	ld_{min} :	27.39 in
A_{sr} :	1.31 in²	A_{sr} :	0.15 in²
A_s Used :	1.56 in²	A_s Used :	0.20 in²

Torque Calculations

P_1 :	39.00 k	P_{1P} :	24.00 k
P_2 :	19.50 k	P_{2P} :	24.00 k
TQ_m :	518.50 ft-k	T_u :	481.58 ft-k
TQ_a :	466.44 ft-k	T_{uo} :	323.20 ft-k
		A_{lr} :	7.72 in²
		A_{la} :	6.32 in²

Factor of safety against sliding (μ=0.40) : 6.97

Pedestal Calculations

V_1 : 15377 lbs V_2 : 174916 lbs V_t : 190293 lbs

About Y Axis		About X Axis	
C_x :	36.00 in	C_y :	36.00 in
G_x :	64.00 in	G_y :	64.00 in
f_a :	5.20 psi	fa :	3405 psi
F_a :	1596 psi	Fa :	26334 psi
f_{bx} :	62 psi	f_{by} :	151 psi
F_{bx} :	1596 psi	F_{by} :	1596 psi
M_x :	405798 ft-lb	M_y :	984697 ft-lb
M_{ox} :	2080333 ft-lb	M_{oy} :	2080333 ft-lb
I_x :	2819327 in⁴	I_y :	2819327 in⁴
A_g :	5184 in²	A_{sm} :	51.84 in²
A_{st} :	45.72 in²	A_s :	12.22 in²
QTY :	44	A_b :	1.27 in²
CSR :	0.15	CSM :	0.67



Nov 8 2024

0

C7 - 7 of 7

Walpar (c) 2014

GENERAL NOTES

1. THE DESIGN/UPRIGHT POST HEIGHT IS FROM THE CENTER OF THE TRUSS/ARM TO THE BOTTOM OF THE BASE PLATE. THE GAP BETWEEN THE BOTTOM OF THE BASE PLATE AND THE TOP OF FOUNDATION IS NOT CONSIDERED IN THE HEIGHT CALCULATIONS. THIS REQUIRED GAP BETWEEN BASE AND FOUNDATION IS NOTED AS "BOLT DIAMETER PLUS 1" MAX" ON ALL DESIGN AND ERECTION DRAWINGS. NOTE THE AASHTO MAXIMUM LIMIT IS (2) BOLT DIAMETERS.
2. ANCHOR BOLTS – ROD = ASTM F1554, GRADE 55, S1
   – WASHERS = ASTM F436
   – NUTS = ASTM A563, GR DH OR A194, GR 2H
3. PIPE – STEEL = ALL PIPE SHALL MEET THE FOLLOWING SPECIFICATIONS WHICH COMPLY TO THE PROPERTIES OF 52 KSI MINIMUM YIELD, 60 KSI MINIMUM ULTIMATE TENSILE, MINIMUM ELONGATION EQUAL TO 20% IN 2 INCHES, AND YIELD STRENGTH NOT TO EXCEED 82 KSI WITHOUT APPROVAL OF THE ENGINEER; ASTM A500 GR B &/or C ASTM A53 GR A &/or B, ASTM A252 GR 2, or 3, & API 5L X42 through X80
   – ALUMINUM = 6061, T6
4. PLATE – STEEL, 3/16" OR GREATER = ASTM A709, GR 50
   – STEEL, 1/8" OR LESS = ASTM A1011, TYPE 1 MINIMUM
   – STEEL, GAUGE = ASTM A1011, TYPE 1 MINIMUM
5. BAR – STEEL = ASTM A36 MINIMUM
6. WIDE FLANGE – STEEL = ASTM A992
7. CHANNEL – STEEL = ASTM A36 MINIMUM
8. ANGLE – STEEL = ASTM A36 MINIMUM
   – ALUMINUM = 6061, T6
9. REBAR – STEEL = ASTM A706, GR 60 (RUNGS)
10. GRATING – STEEL, GRIP STRUT OR EQUAL = ASTM A1011, TYPE 1 MINIMUM
11. HARDWARE – BOLTS, PRIMARY = ASTM F3125 GR A325 (UN)
    – BOLTS, SECONDARY = ASTM A307
    – U–BOLTS = MEET OR EXCEED ASTM A307
    – WASHERS, FLAT = ASTM F436 (UN)
    – WASHERS, LOCK = ANSI B18.21.1 (UN)
    – WASHERS, DTI = F959
    – NUTS – ASTM A563, GR DH OR A194, GR 2H
12. GALVANIZING – STRUCTURAL = ASTM A123
    – HARDWARE = ASTM A153
13. POLE CAPS – ALUMINUM ALLOY SAND CASTING = 356–F
14. SADDLE SHIMS – ALUMINUM = 356–T6
15. WELDING – AWS SPEC D1.1, LATEST REV
16. ALL PIPE SIZES ARE OUTSIDE DIAMETER
17. ALL WELDS TO BE 3/16 FILLET UNLESS NOTED
18. WELDS INSPECTION NOTES ARE AS FOLLOWS:
    18.1 ALL WELDS SHALL BE VISUALLY INSPECTED (VT)
    18.2 FULL PENETRATION WELDS AT SHOP SPLICES WILL BE 100% (UT) TESTED FOR MATERIAL GREATER THAN OR EQUAL TO 0.25" AND (MT) LESS THAN 0.25"
    18.3 FULL PENETRATION WELDS AT BASE PLATES AND MAST ARMS END PLATES WITH 6" DIAMETER AND GREATER ARMS REQUIRE (UT) INSPECTION. IF THE SPECIFICATIONS CALLS FOR FATIGUE DESIGN MUST BE (UT) AFTER GALVANIZE FOR TOE CRACKS
    18.4 PARTIAL PENETRATION GROOVE AND FILLET WELDS AT TUBE TO BASE PLATE CONNECTIONS REQUIRE A RANDOM SAMPLE OF 25% OF THE STRUCTURES WITH (MT) OF FULL LENGTH OF WELD. (EX: JOB OF 2 DOUBLE–POLED UPRIGHTS WOULD CONSIST OF ONE POST OF ONE UPRIGHT WHEREAS ONE POST UPRIGHT WOULD REQUIRE FULL LENGTH OF WELD TESTED)

FOUNDATION NOTES

1. CONCRETE TO BE CLASS "3000" AND f'c=3000 PSI
2. REINFORCING TO BE ASTM – A706, GRADE 60, DEFORMED, Fy = 60 KSI, fs = 24 KSI
3. REINFORCING TO BE TIED SUFFICIENTLY TO RETAIN ITS PROPER SHAPE DURING PLACEMENT.
4. REINFORCING TO BE HOOKED OR BENT PER ACI CODE.
5. CONTRACTOR TO PROVIDE CONDUIT IN FOOTING AS NECESSARY FOR ELECTRICAL SERVICE.
6. SEE STRUCTURE ERECTION DRAWINGS FOR FOOTING ELEVATIONS & ANCHOR BOLT MARKS, QUANTITIES, & SPACING. ALL ANCHOR BOLTS ARE TO BE SET USING SUPPLIED ANCHOR TEMPLATES AND SOLE PLATES.
7. CONTRACTOR SHALL BACK FILL AS NECESSARY TO COVER FOUNDATION.
8. ALL BACK FILL MUST ACHIEVE 95% COMPACTION.
9. CONSTRUCTIONS JOINT ARE ALLOWED WITH FOLLOWING REQUIREMENTS, UNLESS NOTED ON FOUNDATIONS DRAWINGS
   9.1 FOR CYLINDRICAL FOOTINGS, C.J. MUST BE LOCATED AT A MINIMUM OF 4'–3 FROM THE TOP OF THE FOOTING TO ENSURE ANCHORS ARE LOCATED IN FINAL POUR. IF A GRADE BEAM IS USED, ALL BEAMS GREATER THAN THE MINIMUM CAN BE LOCATED AT BEAM TO CYLINDER JOINT UNLESS OTHERWISE NOTED ON THE FOUNDATION DRAWINGS.
   9.2 FOR SPREAD FOOTINGS, C.J. MUST BE LOCATED AT A MINIMUM OF 4'–3 FOR THE TOP OF FOOTING FOR ALL PEDESTALS GREATER THAN 4'–0. JOINTS ARE ALLOWED AT THE PEDESTAL TO PAD LOCATION.
   9.3 ALL CONSTRUCTION JOINT SURFACES MUST BE ROUGH AND CLEAR OF ANY LOOSE OR FOREIGN MATERIAL. PRIOR TO THE PLACEMENT OF FRESH CONCRETE, JOINT SURFACES MUST BE THOROUGHLY WETTED. (USE A BONDING AGENT IF REQ'D BY SPECIFICATIONS)
10. IT IS THE CONTRACTORS RESPONSIBILITY TO INSTALL FOUNDATIONS IN ACCORDANCE WITH SPECIFICATION AND PROPER CONSTRUCTION METHODS.
11. ON CYLINDRICAL FOOTING WHERE A SONOTUBE IS EITHER NOT AVAILABLE OR FEASIBLE, THE TOP PORTION OF THE CYLINDER CAN BE FORMED AS A SQUARE EQUAL TO THE DESIGNED CYLINDER DIAMETER. THE SQUARE FORM MUST START AT LEAST 6 INCHES BELOW GROUND ON THE LOWEST SIDE OF THE FOUNDATION.
12. ON CYLINDRICAL FOOTING WHERE A GRADE BEAM IS USED, THE STIRRUPS USED IN THE BEAM MAY BE SHIFTED TO CLEAR OTHER CYLINDRICAL REINFORCEMENT AND/OR ANCHOR BOLTS AS NECESSARY. NOTE: BE SURE TO MAINTAIN THE 12" MAXIMUM SPACING ON THE STIRRUPS BETWEEN THE (2) CYLINDERS AS SHOWN ON THE DRAWINGS.

INFRASTRUCTURE CONSULTING & ENGINEERING

SHOP DRAWING REVIEW

REVIEW IS FOR GENERAL COMPLIANCE WITH CONTRACT DOCUMENTS. NO RESPONSIBILITY IS ASSUMED FOR CORRECTNESS OF DIMENSIONS OR DETAILS.

APPROVED ☒
APPROVED AS NOTED ☐
REVISE AND RESUBMIT ☐
REJECTED ☐

BY: AOL DATE: 12/16/2024

SCDOT
South Carolina Department of Transportation

ACCEPTED

[X] AS NOTED

REVIEWED BY: John Egan 1/27/25
DATE

Note: Foundation revision was not included with the attached designs.

ALL GROUPS

AASHTO 6th Edition Spec's

SEALED BY:

SOUTH CAROLINA PROFESSIONAL ENGINEER
Robert R Wigington
No. 35290
ROBERT R WIGINGTON

Nov 8 2024

SOUTH CAROLINA PROFESSIONAL ENGINEER
David A Lallone
No. 38665
DAVID A LALLONE

Sep 8 2023

NO:	REVISIONS	DATE	MADE	CHECKED
0	CHECK COMPLETE	8/21/23	IWL	DAL

WP walpar
A valmont COMPANY
POST OFFICE BOX 28650
BIRMINGHAM ALABAMA 35228
4200 JEFFERSON AVENUE
BIRMINGHAM ALABAMA 35221
PHONE (205)–925–4990
FAX (205) 925–7273

△0

STATE: South Carolina
FED PROJ: Carolina Crossroads Phase 1 & 2
ST PROJ: P039718
COUNTY: Lexington & Richland
ROUTE: I–26 & I–126

SUBJECT: GENERAL NOTES FOR PROJECT
WALPAR STANDARD DESIGN
FOR: Archer–United Joint Venture

DRAWN BY: IWL DATE: 7/19/23
CHECKED BY: DAL DATE: 8/21/23
DWG NO: C3546–G1

NAME: E:\acad\Djobs\SC\3546\3546–G1.dwg DATE: AUG 21, 2023 TIME: 9:52 AM dl706291

STRUCTURE	STATION	SPAN	UPRIGHT	CHORD	VERTICAL STRUT	VERTICAL DIAGONAL	HORIZ STRUT/DIAG	CAMBER	POST TILT	BOLTS @ CHORD	ANCHOR BOLTS QTY	ANCHOR BOLTS SIZE	ANCHOR BOLTS EMBED	GUSSET REQ'D	"A"	"B"	"C"	"D"	"F"	"G"	"H"	"K"	"L"	DESIGN SIGN AREA
OH–23	5423+81.11(EB)	47'–8	36.000 x .750	4.500 x .237	1.660 x .140	1.660 x .140	1.900 x .200	5 15/16	2 1/16	12	16	2 1/2	3'–9	16	63'–8 3/4	4'–3	4'–6	2 1/2	5/16	1/4	4 – 7/8	3/4	1/4	318.8

STRUCTURE IS OPPOSITE FROM SHOWN

NOTE: ALL PIPE SIZES ARE OUTSIDE DIAMETER

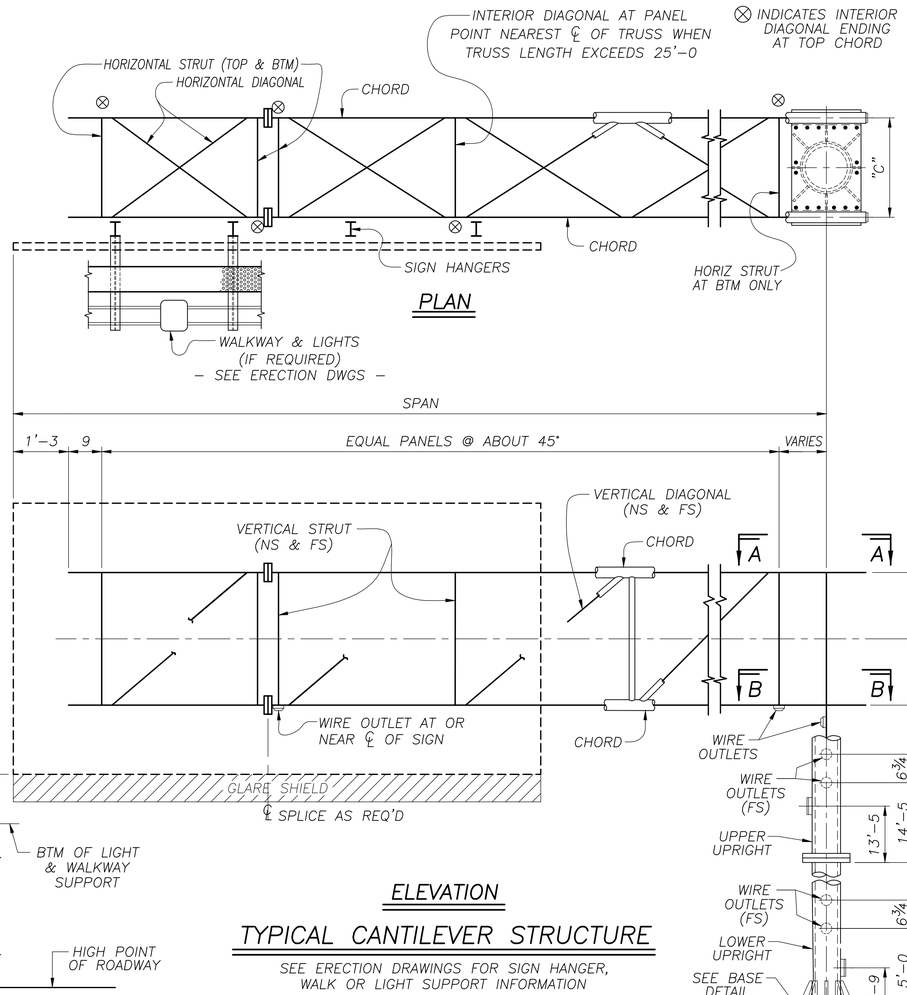

STRUCTURE	STUB SPLICE INFORMATION "M"	"N"	"P"	"S"	"T"
OH–23	30'–0	2	28	1 1/2	3'–6

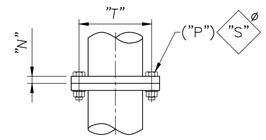

POST SPLICE

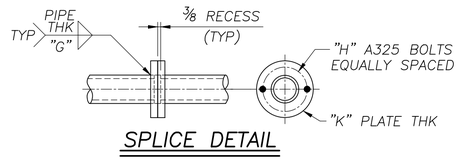

SPLICE DETAIL

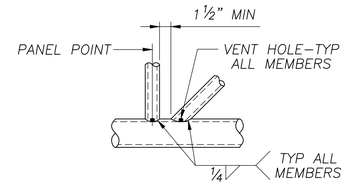

TYP DETAIL AT PANEL POINT

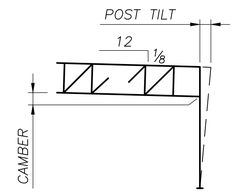

CAMBER DIAGRAM

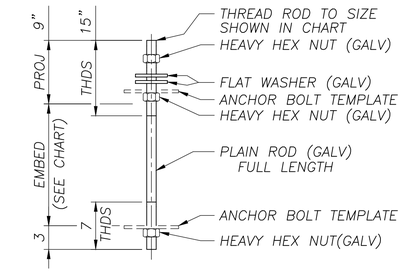

ANCHOR DETAIL

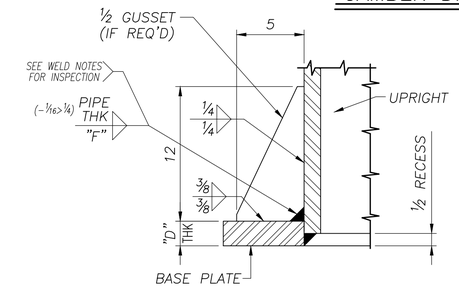

SECTION C–C

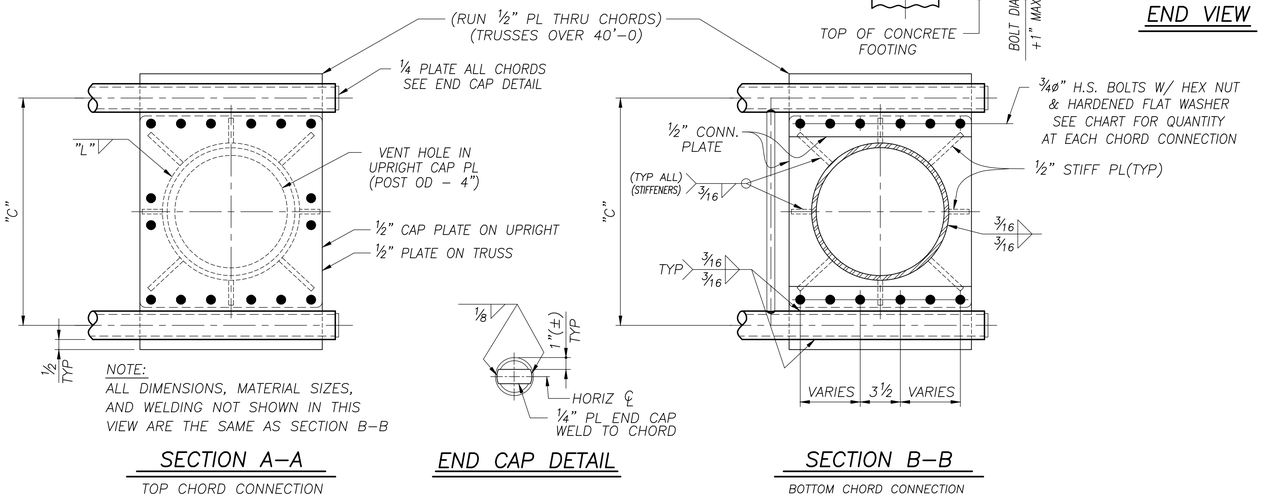

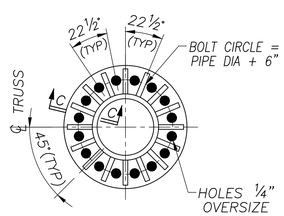

TYP BASE DETAIL
(FOR 16 ANCHOR BOLTS)

NOTE:
SEE GENERAL NOTES DRAWING FOR MATERIAL SPECIFICATIONS, FOUNDATION AND STANDARD NOTES

GROUP 1

AASHTO 6th Edition Spec's

SEALED BY:



Nov 8 2024

NO:	REVISIONS	DATE	MADE	CHECKED
0	CHECK COMPLETE	11/8/24	RRW	MAH

walpar
A valmont COMPANY
POST OFFICE BOX 28650
BIRMINGHAM ALABAMA 35228
4200 JEFFERSON AVENUE
BIRMINGHAM ALABAMA 35221
PHONE (205)–925–4990
FAX (205) 925–7273

0

STATE: South Carolina
FED PROJ: Carolina Crossroads Phase 1 & 2
ST PROJ: P039718
COUNTY: Lexington & Richland
ROUTE: I–26 & I–126

SUBJECT: BOX TRUSS CANTILEVER SIGN SUPPORTS
WALPAR STANDARD DESIGN
FOR: Archer–United Joint Venture

DRAWN BY: RRW DATE: 10/4/24
CHECKED BY: MAH DATE: 11/8/24

DWG NO: C3546–D23

BTCT–D

NAME: E:\acad\Djobs\SC\3546\3546–D23.dwg DATE: NOV 08, 2024 TIME: 3:12 PM mh721009

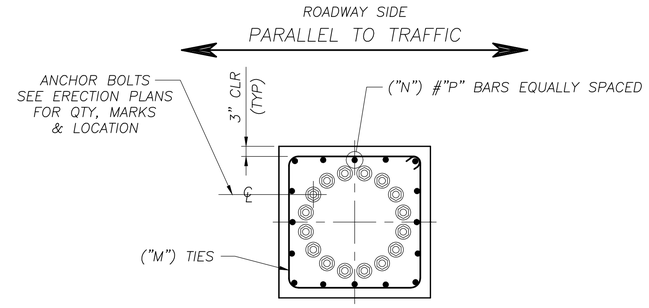

(16) ANCHOR BOLTS
(TYP)

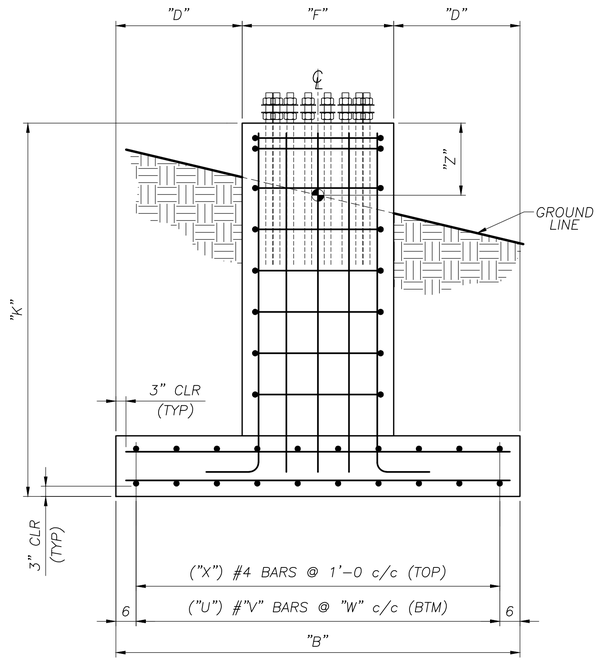

END VIEW

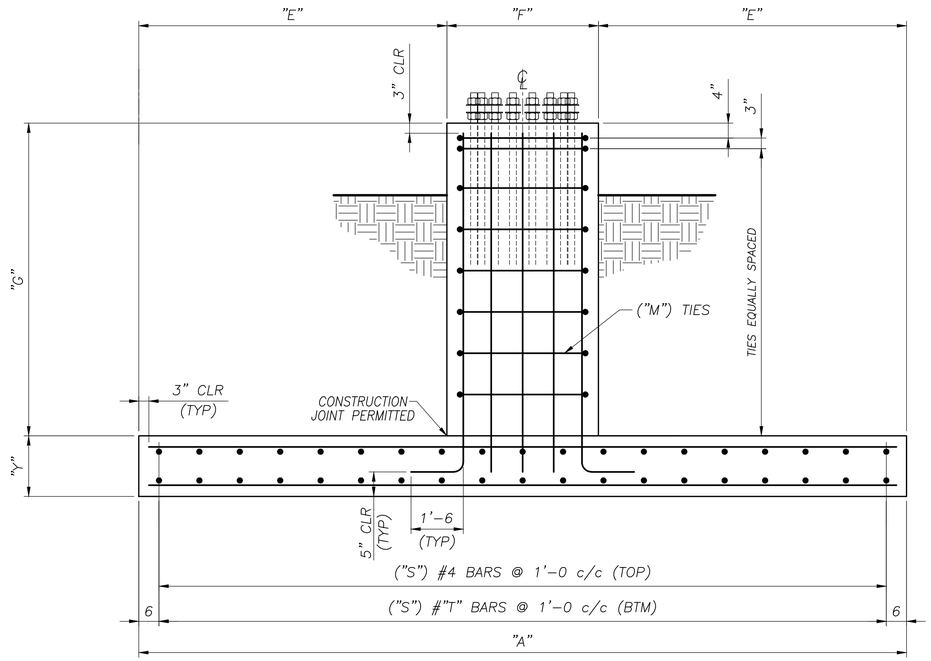

SIDE VIEW

STRUCTURE	STATION	"A"	"B"	"D"	"E"	"F"	"G"	"K"	"M"	"N"	"P"	"S"	"T"	"U"	"V"	"W"	"X"	"Y"	CONC FTG (cu yds)	REINF FTG (lbs)	"Z"
OH-23	5423+81.11(EB)	26'-0	13'-0	3'-6	10'-0	6'-0	5'-0	6'-9	6-#5	44	10	26	4	13	10	1'-0	13	1'-9	28.57	3630	1'-0
								1							1				1		

Revision was not included in calculations. "V" rebar was previously larger - size #11.

I just want to make sure this is the correct size.

Edit Comments (As per our phone conversation, the original submittal design included #11 bars with a foundation pad thickness of 1'-6". However, this design presented a shear inadequacy. To address this issue, the foundation was redesigned with an increased pad thickness of 1'-9", which resolved the shear concern. Additionally, the reinforcement bars in the X direction, noted as "V" in the chart, were revised to require only #10 bars. As confirmed in the submitted drawing (C3546-D24) and the

NOTE:
SEE GENERAL NOTES DRAWING FOR MATERIAL SPECIFICATIONS, FOUNDATION AND STANDARD NOTES

GROUP 1

AASHTO 6th Edition Spec's

SEALED BY:

SOUTH CAROLINA REGISTERED No. 35290 PROFESSIONAL ENGINEER ROBERT R WIGINTON

Robert R Wiginton

Nov 22 2024

NO:	REVISIONS	DATE	MADE	CHECKED
1	REVISED FOUNDATION FOR SHEAR	11/22/24	---	RRW

walpar
A valmont COMPANY
POST OFFICE BOX 28650
BIRMINGHAM ALABAMA 35228
4200 JEFFERSON AVENUE
BIRMINGHAM ALABAMA 35221
PHONE (205)-925-4990
FAX (205) 925-7273

1

STATE:	South Carolina
FED PROJ:	Carolina Crossroads Phase 1 & 2
ST PROJ:	P039718
COUNTY:	Lexington & Richland
ROUTE:	I-26 & I-126
SUBJECT:	OVERHEAD SIGN SUPPORT SINGLE POLE SPREAD FOOTING DESIGN
FOR:	Archer-United Joint Venture
DRAWN BY:	RRW DATE: 10/4/24
CHECKED BY:	MAH DATE: 10/31/24
DWG NO:	C3546-D24

SP-SF-D

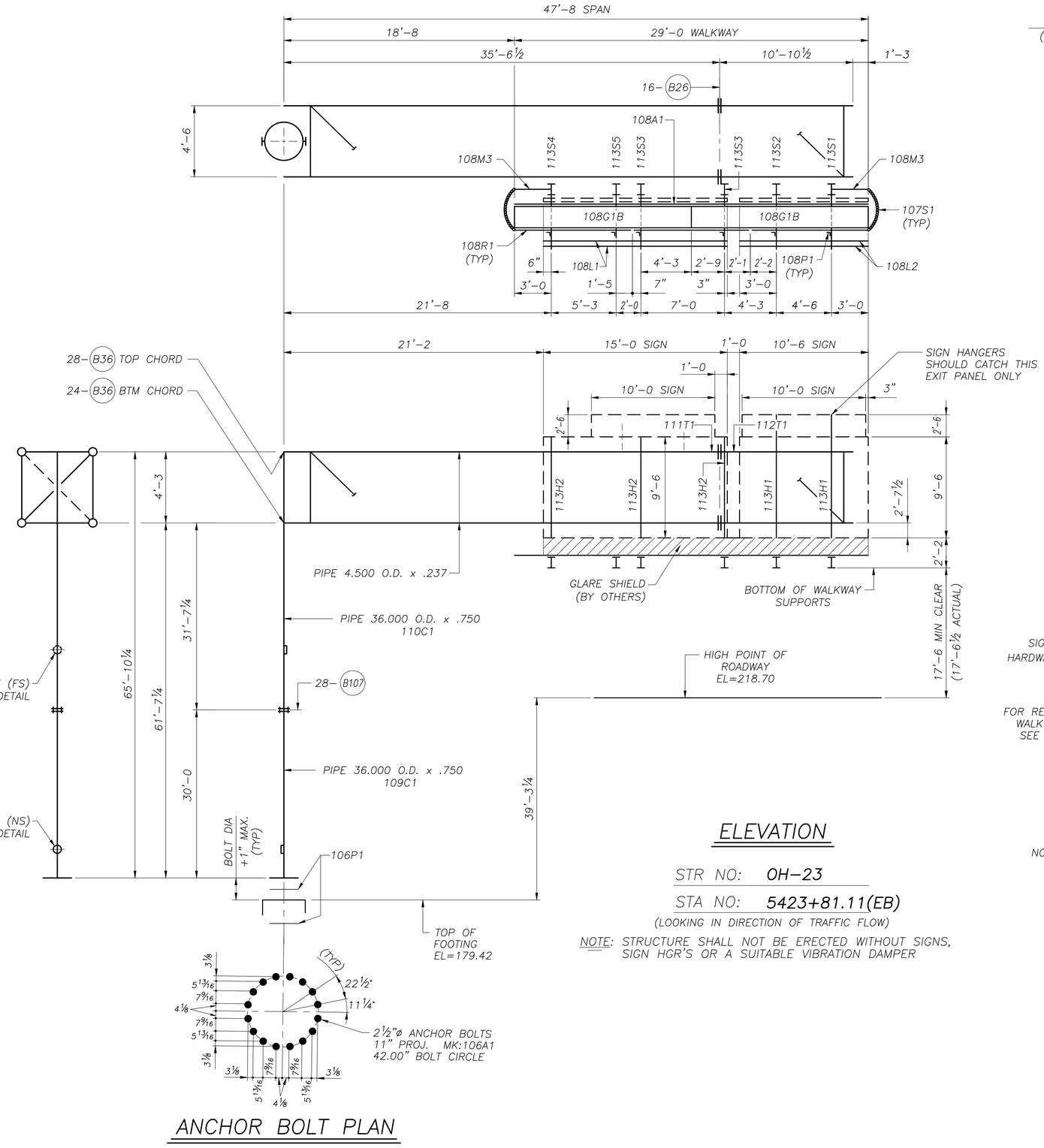

ELEVATION

STR NO: OH-23

STA NO: 5423+81.11(EB)

(LOOKING IN DIRECTION OF TRAFFIC FLOW)

NOTE: STRUCTURE SHALL NOT BE ERECTED WITHOUT SIGNS, SIGN HGR'S OR A SUITABLE VIBRATION DAMPER

ANCHOR BOLT PLAN

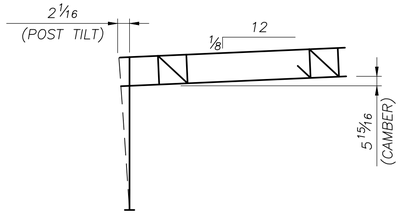

CAMBER DIAGRAM

ERECTION NOTE

1) TILT POST AWAY FROM ROADWAY AT ERECTION BY ADJUSTING LEVELING NUTS.
2) 1" MINIMUM PERMANENT CAMBER AFTER DEFLECTION.

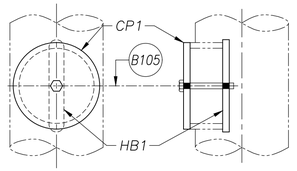

HANDHOLE DETAIL

PRE ASSEMBLE CP1 TO HB1 WITH B105 BOLT. DISTURB THREADS SO HB1 CAN NOT BE REMOVED. INSTALL COVER ASSEMBLY INTO HANDHOLE OPENING AND TIGHTEN BOLT TO SECURE.

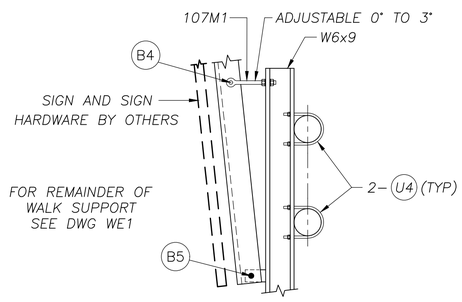

TYP SECTION THRU SIGN SUPPORT & SIGN HANGER

NOTE: EXIT PANELS & SUPPORTS BY OTHERS UNLESS NOTED

SHIPPING LIST		C3546-E16
QTY	MARK	DESCRIPTION
16	106A1	ANCHOR BOLTS
2	106P1	ANCHOR TEMPLATES
1	111T1	CANTILEVER TRUSS 5.4' x 5.1' x 37.5'
1	112T1	CANTILEVER TRUSS 5.4' x 5.1' x 10.9'
1	110C1	CANTILEVER POST 4' x 4' x 35.8'
1	109C1	UPRIGHT STUB 4' x 4' x 30'
2	108M3	SAFETY CHAIN SUPPORT
2	107S1	SAFETY CHAIN
6	107P1	HINGE PIN ASSEMBLIES
12	108M1	CLAMP PLATES
2	108M2	SPLICE PLATES
6	108P1	HANDRAIL POSTS
6	108R1	HANDRAILS
1	108A1	SAFETY ANGLE
2	108G1B	GRATING
1	113S1	SIGN/WALK/LIGHT SUPPORT
1	113S2	SIGN/WALK/LIGHT SUPPORT
2	113S3	SIGN/WALK/LIGHT SUPPORTS
1	113S4	SIGN/WALK/LIGHT SUPPORT
1	113S5	WALK SUPPORT
2	113H1	SIGN HANGERS (ANGLE ARM)
3	113H2	SIGN HANGERS (ANGLE ARM)
5	107M1	EYEBOLT ASSEMBLIES
2	108L1	LIGHT SUPPORTS
2	108L2	LIGHT SUPPORTS
2	CP1	COVER PLATE ASSEMBLY
2	HB1	HANDHOLE BAR
34	B1	3/8" x 1 1/4" BOLT w/HN/LW (A307 GALV)
12	B3	1 3/8" OD x 14 GA WASHER (A307 GALV)
10	B4	3/4" x 2 1/2" HHB w/HN/FW/LW (A325 GALV) (EB)
10	B5	3/4" x 2" HHB w/HN/LW (A325 GALV) (EB)
11	B6	1/2" x 1 1/2" HHB w/HN/LW (A325 GALV) (EB)
26	B26	7/8" x 3" HHB w/HN/FW/DTI (A325 GALV) (EB)
72	B36	3/4" x 2 1/2" HHB w/HN/FW/DTI (A325 GALV) (EB)
4	B105	1/4" x 6" Hex Hd c/s (STAINLESS STL)
38	B107	1 1/2" x 6 1/4" HHB w/HN/FW/DTI (A325 GALV) (EB)
12	U1	5/16" U-Bolts w/(2 ea) HN/LW (ZINC PL)
24	U4	1/2" U-Bolts w/(2 ea) HN/LW/FW (GALV)

(EB)=EXTRA BOLTS HAVE BEEN INCLUDED FOR TESTING OR FIELD USE

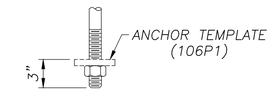

ANCHOR DETAIL

(TYPICAL)

NOTE:
SEE GENERAL NOTES DRAWING FOR MATERIAL SPECIFICATIONS, FOUNDATION AND STANDARD NOTES

OH-23

DESIGN DWGS: D23, D24 DESIGN NO: BC7 AASHTO 6th Edition Spec's

SEALED BY:



Nov 8 2024

NO:	REVISIONS	DATE	MADE	CHECKED
0	CHECK COMPLETE	11/8/24	DLK	DLJ

walpar
A valmont COMPANY
POST OFFICE BOX 28650
BIRMINGHAM ALABAMA 35228
4200 JEFFERSON AVENUE
BIRMINGHAM ALABAMA 35221
PHONE (205)-925-4990
FAX (205) 925-7273

0

STATE:	South Carolina
FED PROJ:	Carolina Crossroads Phase 1 & 2
ST PROJ:	P039718
COUNTY:	Lexington & Richland
ROUTE:	I-26 & I-126

SUBJECT: CANTILEVER SIGN SUPPORT ERECTION DRAWING

FOR: Archer-United Joint Venture

DRAWN BY: DLK DATE: 11/6/24

CHECKED BY: DLJ DATE: 11/8/24

DWG NO: C3546-E16

CANT-E

NAME: E:\acad\JobsNPrg\3546\3546-E16.dwg DATE: NOV 08, 2024 TIME: 7:25 AM dj706290

C3546–106
SOUTH CAROLINA

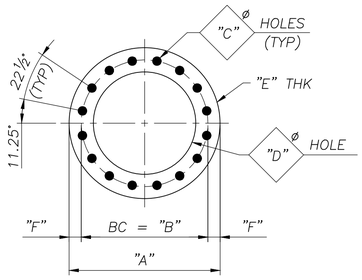

TYPE "GG"
(SEE CHART FOR INFORMATION)

ANCHOR TEMPLATE CHART

(ALL DIMENSIONS IN INCHES)

MARK	QTY	TYPE	"A"	"B"	"C"	"D"	"E"	"F"
106P1	2	GG	47	42	2⅝	37	¼	2½

NOTE:
THREADS (ROLLED OR CUT) FOR "H" NUT

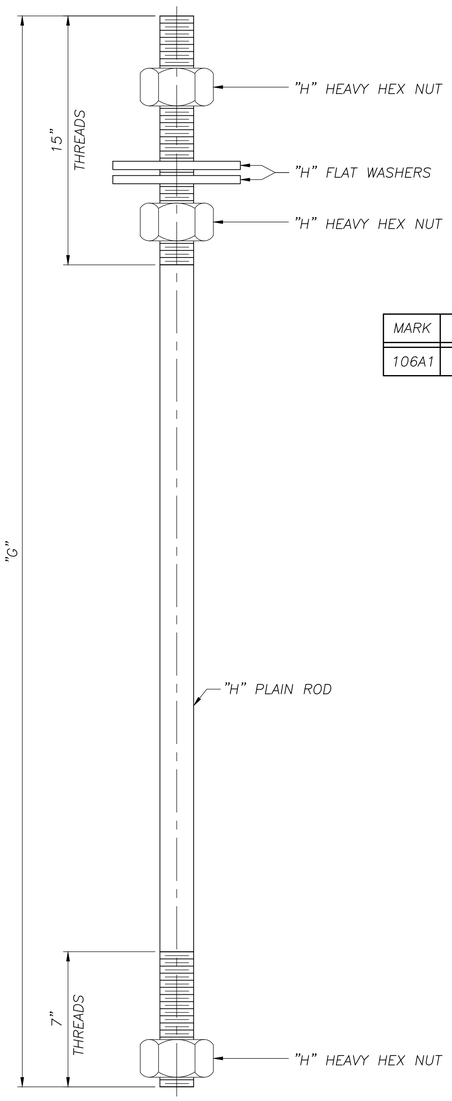

~ ANCHOR BOLTS ~

MARK	"G"	"H"ø	(TPI)	ROD QTY	NUT QTY	FW QTY	
106A1	4'–11	2½	4	16	48	32	

Edit Comments (Regarding the galvanization of anchor bolts, it is standard practice in our shop and with Walpar's vendor that all anchor bolts are galvanized full length unless otherwise specified.)

C3546–106

PARTS PER CONT	PART MARK NO	NO OF PIECES REQ'D	SECTION SYM	DESCRIPTION OF MATERIAL	LENGTH FEET	LENGTH INCHES	PARTS FOR ONE UNIT
	106P1	2		ANCHOR TEMPLATES			
	a	2	PL	¼ x 47 DIA	–	–	

SHIPPING LIST

QTY	MARK	DESCRIPTION
2	106P1	ANCHOR TEMPLATES
16	106A1	ANCHOR BOLTS

NOTE: SHOP SHIP FROM THIS DRAWING

NOTE:
DO NOT GALVANIZE TEMPLATES
Galvanize Anchor rods (entire length)

NOTE:
SEE GENERAL NOTES DRAWING FOR MATERIAL SPECIFICATIONS, FOUNDATION AND STANDARD NOTES

REF DWG: E16

OH–23

AASHTO 6th Edition Spec's

SEALED BY:

SOUTH CAROLINA LICENSED PROFESSIONAL ENGINEER No. 35290 ROBERT R WIGINTON

Nov 8 2024

walpar
A valmont COMPANY

POST OFFICE BOX 28650
BIRMINGHAM ALABAMA 35228
4200 JEFFERSON AVENUE
BIRMINGHAM ALABAMA 35221
PHONE (205)–925–4990
FAX (205) 925–7273

0

STATE:	South Carolina
FED PROJ:	Carolina Crossroads Phase 1 & 2
ST PROJ:	P039718
COUNTY:	Lexington & Richland
ROUTE:	I–26 & I–126
SUBJECT:	SIGN STRUCTURE ANCHOR BOLT & TEMPLATE DETAILS
FOR:	Archer–United Joint Venture
DRAWN BY:	DLK DATE: 11/6/24
CHECKED BY:	DLJ DATE: 11/8/24

DWG NO: C3546–106

NO:	REVISIONS	DATE	MADE	CHECKED
0	CHECK COMPLETE	11/8/24	DLK	DLJ

ABAT_TEMP

NAME: E:\acad\JobsNPrg\3546\3546–106.dwg DATE: NOV 08, 2024 TIME: 7:25 AM dj706290

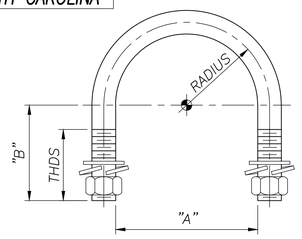

NOTE 1:
- UBOLT MATERIAL PROPERTIES TO MEET OR EXCEED A307
- GALV PER A153

NOTE 2:
- UBOLT MATERIAL PROPERTIES TO MEET OR EXCEED A307
- ZINC PL PER B633

~ U–BOLTS w/(2ea) HN/LW/FW ~

NUTS: ASTM A563,GR.DH OR ASTM A194,GR.2H
WASHERS: ASTM F436 & ANSI–B18.21.1

MARK	QTY	DIA	"A"	"B"	RADIUS	THDS	MATERIAL
U1	12	5/16	1 11/16	1 5/8	1	1 1/4	NOTE 2
U4	24	1/2	4 5/8	4 1/4	2 3/16	2	NOTE 1

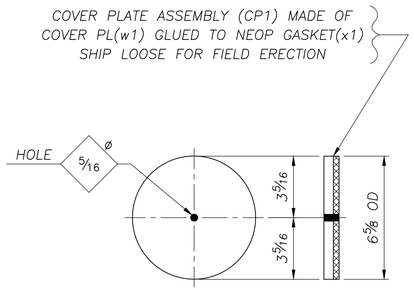

2 ~ COVER PLATE ASSEMBLY ~ CP1

PART MARK NO.	NO. OF PIECES REQ'D.	SECTION SYM	DESCRIPTION OF MATERIAL	LENGTH FEET	LENGTH INCHES	PARTS FOR ONE UNIT
CP1	2		COVER PLATE ASSEMBLY			
w1	2	PL	1/4 x 6 5/8 DIA. (GALV A123)	–	–	1
x1	2	OP	1/8 x 6 5/8 DIA. (NEOP GASKET)	–	–	1

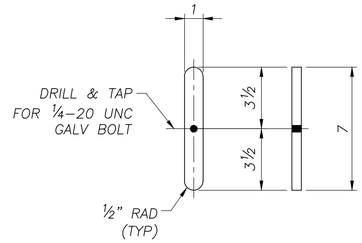

2 ~ HANDHOLE BAR ~ HB1

PART MARK NO.	NO. OF PIECES REQ'D.	SECTION SYM	DESCRIPTION OF MATERIAL	LENGTH FEET	LENGTH INCHES	PARTS FOR ONE UNIT
HB1	2		HANDHOLE BAR			
w2	2	PL	1/4 x 1 (GALV A123)	0	7	1

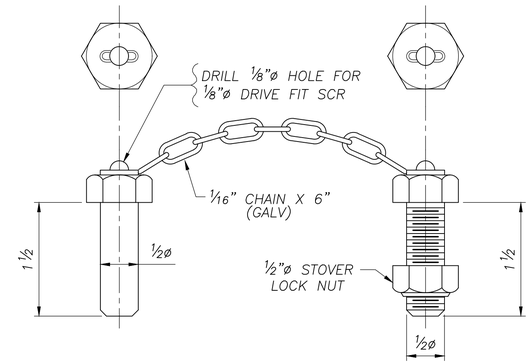

6 ~ HINGE PIN ASSEMBLY ~ 107P1

MAT'L SPECS: ASTM A307 (ZINC PL UN)

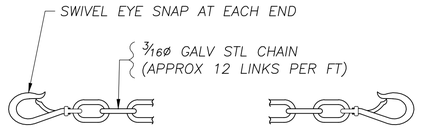

~ SAFETY CHAIN ~

MARK	QTY	LENGTH
107S1	2	4'–6

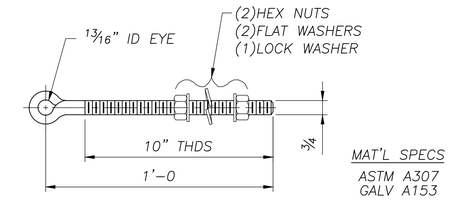

MAT'L SPECS
ASTM A307
GALV A153

5 ~ EYE BOLT ASSEMBLY ~ 107M1

NUTS: ASTM A563,GR.DH OR ASTM A194,GR.2H
WASHERS: ASTM F436 & ANSI–B18.21.1

NOTE:
SEE GENERAL NOTES DRAWING FOR MATERIAL SPECIFICATIONS, FOUNDATION AND STANDARD NOTES

REF DWGS: E16

OH–23

AASHTO 6th Edition Spec's

SEALED BY:



Nov 8 2024

walpar
A valmont COMPANY
POST OFFICE BOX 28650
BIRMINGHAM ALABAMA 35228
4200 JEFFERSON AVENUE
BIRMINGHAM ALABAMA 35221
PHONE (205)–925–4990
FAX (205) 925–7273

STATE:	South Carolina
FED PROJ:	Carolina Crossroads Phase 1 & 2
ST PROJ:	P039718
COUNTY:	Lexington & Richland
ROUTE:	I–26 & I–126
SUBJECT:	SIGN STRUCTURES MISC DETAILS
FOR:	Archer–United Joint Venture
DRAWN BY:	DLK DATE: 11/6/24
CHECKED BY:	DLJ DATE: 11/8/24
DWG NO:	C3546–107

NO:	REVISIONS	DATE	MADE	CHECKED
0	CHECK COMPLETE	11/8/24	DLK	DLJ

KITDWG3

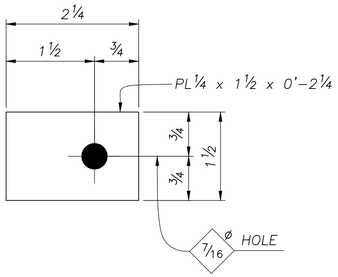

12 ~ CLAMP PLATES ~ 108M1

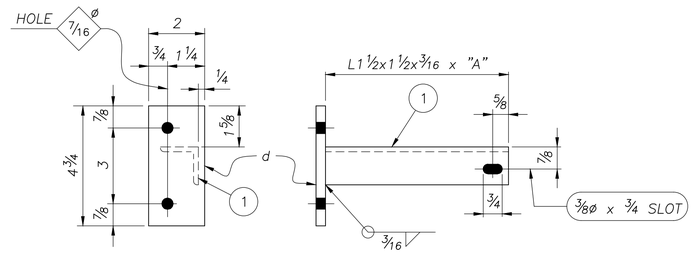

~ SAFETY CHAIN SUPPORT ~

(SEE CHART)

MARK	QTY	"A"	(1)
108M3	2	3'-0	f

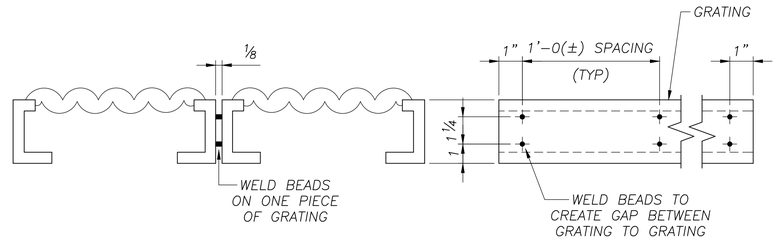

GRATING GAP DETAIL

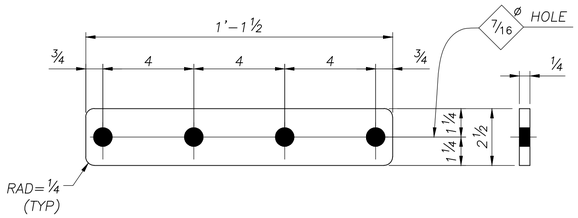

2 ~ SPLICE PLATES ~ 108M2

(FOR GRATING)

SHOP NOTE:

GRATING TO BE "GRIP STRUT", OR EQUAL SAFETY GRATING 3" DEEP, FORMED FROM 12 GA SHEETS GALV AFTER FAB WELDED TOGETHER IN A COMBINATION OF THESE SIZES
(1) #8 DIAMOND 18 3/4" WIDE – CAT# 83012 AND
(1) #5 DIAMOND 11 3/4" WIDE – CAT# 53012

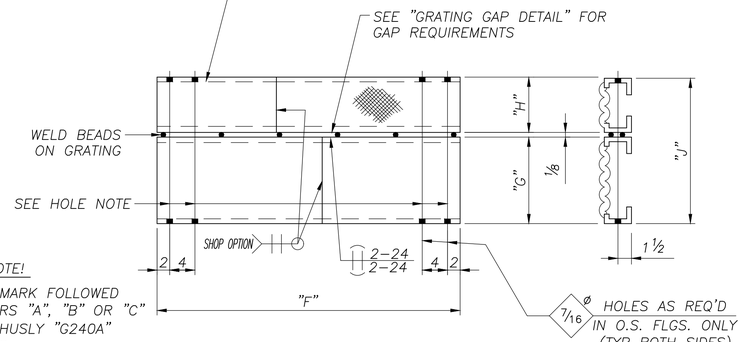

HOLE NOTE!

GRATING MARK FOLLOWED BY LETTERS "A", "B" OR "C" SHOWN THUSLY "G240A" DESIGNATE:
"A" – NO HOLES
"B" – HOLES 1–END
"C" – HOLES BOTH ENDS

~ GRATING ~

(SEE CHART)

MARK	QTY	"F"	"G"	"H"	"J"
108G1B	2	14'-6	1'-6 3/4	11 3/4	2'-6 5/8

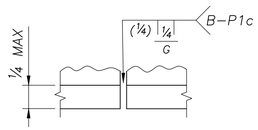

TOE ANGLE SPLICE

(OPTIONAL)

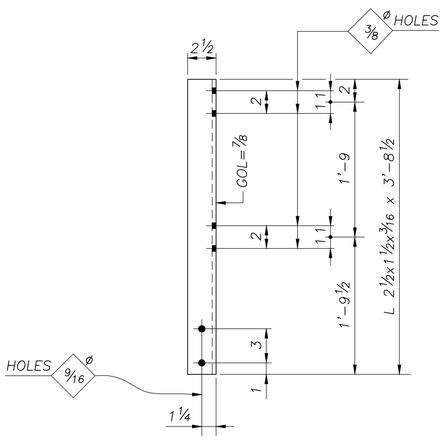

6 ~ HANDRAIL POSTS ~ 108P1

(ALUMINUM)

PARTS PER CONT	PART MARK NO	NO. OF PIECES REQ'D	SECTION SYM	DESCRIPTION OF MATERIAL	LENGTH FEET	LENGTH INCHES	PARTS FOR ONE UNIT	
	108M1	12		CLAMP PLATES				
	a	12	PL	1/4 x 1 1/2	0	2 1/4		
	108M2	2		SPLICE PLATES				
	b	2	PL	1/4 x 2 1/2	1	1 1/2		
	108M3	2		SAFETY CHAIN SUPPORT				
	d	2	PL	1/4 x 2	0	4 3/4		
	f	2	L	1 1/2 x 1 1/2 x 3/16	3	0		
	108G1B	2		GRATING				
	g	2	GRT	18 3/4 WIDE	14	6		
	n	2	GRT	11 3/4 WIDE	14	6		
	108P1	6		HANDRAIL POSTS				
	h	6	ALL	2 1/2 x 1 1/2 x 3/16 (ALUM 6061)	3	8 1/2		
	108R1	6		HANDRAIL				
	k	6	ALPI	1.660 x .140 (ALUM 6061)	9	8		
	108A1	1		SAFETY ANGLE				
	m	1	L	4 x 3 x 1/4	29	0		
	108L1	2		LIGHT SUPPORTS (ALUM 6063-T6)				
	s	2	ALUN	UNISTRUT 1 5/8 x 1 5/8 x .105	15	0		
	108L2	2		LIGHT SUPPORTS (ALUM 6063-T6)				
	as	2	ALUN	UNISTRUT 1 5/8 x 1 5/8 x .105	10	6		

C3546-108

NOTE:

SEE GENERAL NOTES DRAWING FOR MATERIAL SPECIFICATIONS, FOUNDATION AND STANDARD NOTES

REF DWG: E16

OH-23

AASHTO 6th Edition Spec's

SEALED BY:

SOUTH CAROLINA PROFESSIONAL ENGINEER
Robert R Wigington
No. 35290
ROBERT R WIGINTON

Nov 8 2024

NO:	REVISIONS	DATE	MADE	CHECKED
0	CHECK COMPLETE	11/8/24	DLK	DLJ

walpar
A valmont COMPANY
POST OFFICE BOX 28650
BIRMINGHAM ALABAMA 35228
4200 JEFFERSON AVENUE
BIRMINGHAM ALABAMA 35221
PHONE (205)-925-4990
FAX (205) 925-7273

STATE:	South Carolina
FED PROJ:	Carolina Crossroads Phase 1 & 2
ST PROJ:	P039718
COUNTY:	Lexington & Richland
ROUTE:	I-26 & I-126
SUBJECT:	SIGN STRUCTURE
	MISC DETAILS
FOR:	Archer-United Joint Venture
DRAWN BY:	DLK
DATE:	11/6/24
CHECKED BY:	DLJ
DATE:	11/8/24
DWG NO:	C3546-108

WalkWayDetails

NAME: E:\acad\JobsNPrg\3546\3546-108.dwg DATE: NOV 08, 2024 TIME: 7:24 AM dj706290

MARK	QTY	"A"			"D"	"E"	"F"	"G"	"H"
109C1	1	30'-0			3'-6	3'-6	2¼	28	1⅝

MARK				"M"	"N" QTY	"N" DIA	"P"	"S"		1	2	3				8
109C1				5/16	16	2¾	3⅛	3'-0 1/16		a	b	d				h

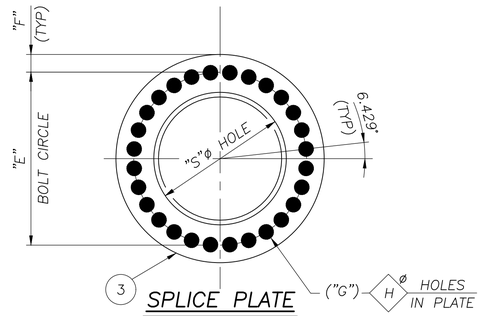

SPLICE PLATE

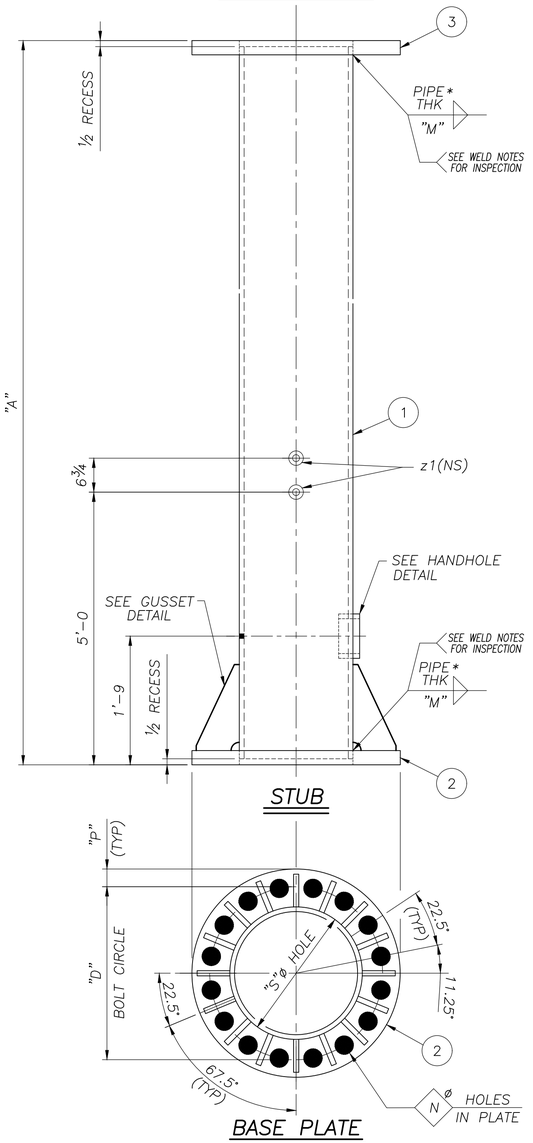

*NOTE:
PIPE THK −1/16 FOR PIPE WALLS >¼"

STUB

BASE PLATE

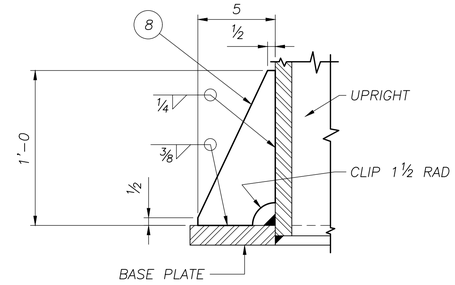

TYP GUSSET DETAIL

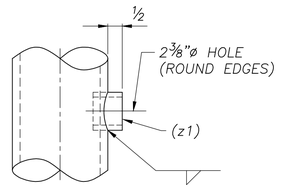

WIRE OUTLET DETAIL

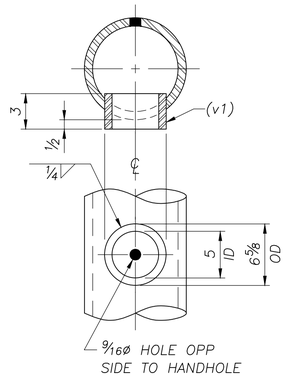

HANDHOLE DETAIL

C3546-109

PARTS PER CONT	PART MARK NO	NO. OF PIECES REQ'D	SECTION SYM	DESCRIPTION OF MATERIAL	LENGTH FEET	LENGTH INCHES	PARTS FOR ONE UNIT	
	109C1	1		UPRIGHT STUB				
	a	1	PIPE	36.000 x .750	29	11		
	b	1	PL	2½ x 48¼ DIA.	–	–		
	d	1	PL	2 x 46½ DIA.	–	–		
	h	16	PL	½ x 5	1	0		
	v1	1	PIPE	6.625 x .864	0	3		
	z1	2	OP	1¼" FORGED HALF CPLG (3000#)	–	–		

NOTE:
SEE GENERAL NOTES DRAWING FOR MATERIAL SPECIFICATIONS, FOUNDATION AND STANDARD NOTES

REF DWG: E16

OH-23

AASHTO 6th Edition Spec's

SEALED BY:

SOUTH CAROLINA PROFESSIONAL ENGINEER ROBERT R WIGINTON No. 35290

Nov 8 2024

NO:	REVISIONS	DATE	MADE	CHECKED
0	CHECK COMPLETE	11/8/24	DLK	DLJ

walpar
A valmont COMPANY
POST OFFICE BOX 28650
BIRMINGHAM ALABAMA 35228
4200 JEFFERSON AVENUE
BIRMINGHAM ALABAMA 35221
PHONE (205)-925-4990
FAX (205) 925-7273

0

STATE: South Carolina
FED PROJ: Carolina Crossroads Phase 1 & 2
ST PROJ: P039718
COUNTY: Lexington & Richland
ROUTE: I-26 & I-126

SUBJECT: CANTILEVER SIGN SUPPORT
DETAILS OF UPRIGHT STUB

FOR: Archer-United Joint Venture

DRAWN BY: DLK DATE: 11/6/24
CHECKED BY: DLJ DATE: 11/8/24

DWG NO: C3546-109

CBTUPDET

NAME: E:\acad\JobsNPrg\3546\3546-109.dwg DATE: NOV 08, 2024 TIME: 7:23 AM djT06290

MARK	QTY	"A"	"B"	"C"	"D"	"E"	"F"	"G"	"H"
110C1	1	35'–10	31'–7	4'–3	3'–6	1'–9	4 @ 4 1/16 = 1'–6 3/4	1'–10 3/4	5 @ 3 3/4 = 1'–6 3/4

MARK	"J"	"K"	"L"	"M"	"N" QTY	"N" DIA	"P"	"S"	"T"	1	2	3	4	5	6	7	
110C1	3 1/4	5 1/2	11 1/8	5/16	28	1 5/8	2 1/4	3'–0 1/16	1/4	a	b	d	f	k	m	n	

PARTS PER CONT	PART MARK NO	NO. OF PIECES REQ'D	SECTION SYM	DESCRIPTION OF MATERIAL	LENGTH FEET	LENGTH INCHES	PARTS FOR ONE UNIT	
	110C1	1		CANTILEVER POST				
	a	1	PIPE	36.000 x .750	35	9 3/16		
	b	1	PL	2 x 46 1/2 DIA.	–	–		
	d	1	PL	1/2 x 43 1/2	4	0		
	f	1	PL	1/2 x 43 1/2	4	0		
	k	4	PL	1/2 x 3 1/4	0	3 1/4		
	m	4	PL	1/2 x 5 1/2	0	5 1/2		
	n	8	PL	1/2 x 11 1/8	0	11 1/8		
	v1	1	PIPE	6.625 x .864	0	3		
	z1	3	OP	1 1/4" FORGED HALF CPLG (3000#)	–	–		

C3546–110

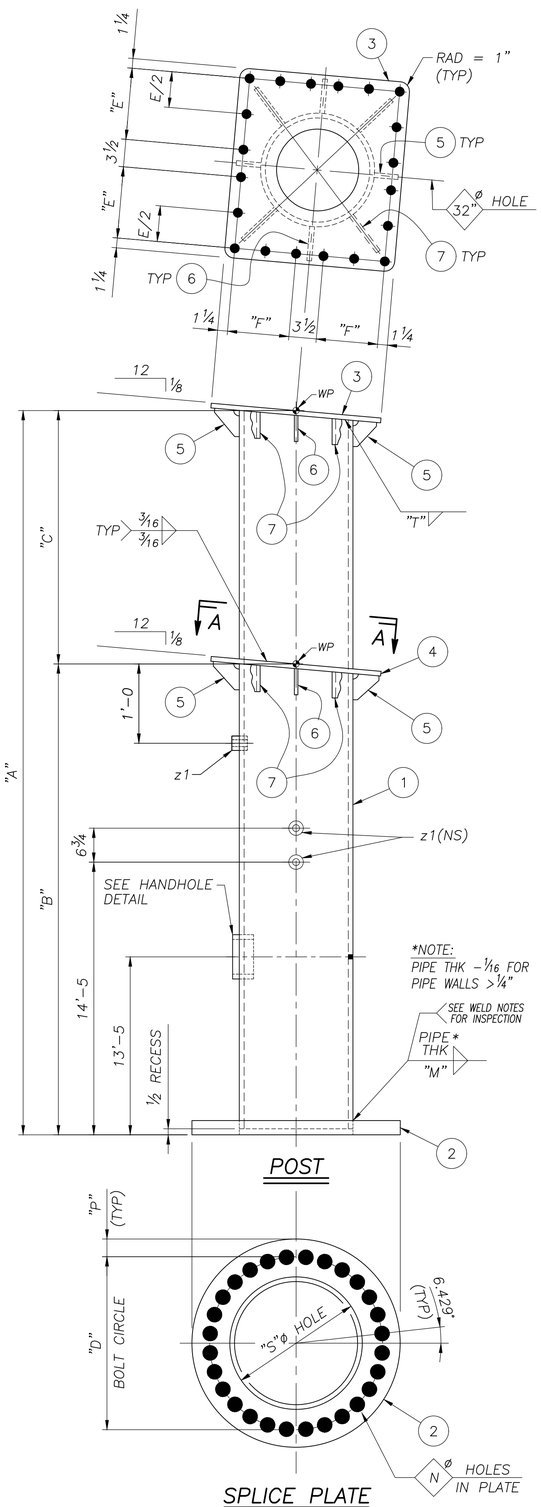

POST

SPLICE PLATE

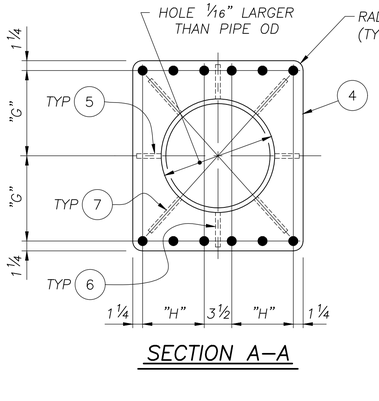

SECTION A–A

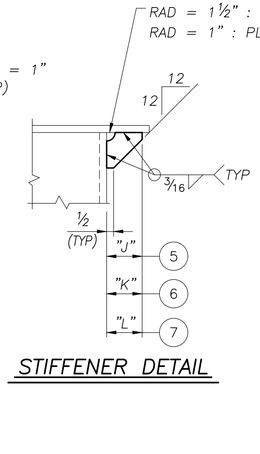

STIFFENER DETAIL

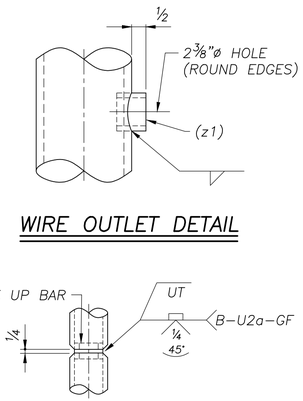

WIRE OUTLET DETAIL

OPTIONAL SPLICE

(FOR WALL THK 5/16" OR GREATER ONLY)

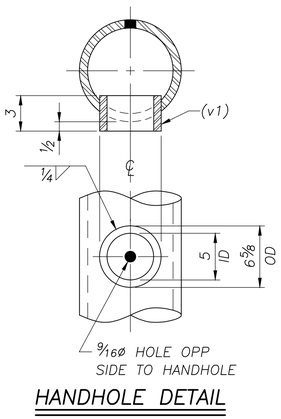

HANDHOLE DETAIL

NOTE:
ALL HOLES TO BE 7/8 Ø UNLESS NOTED

NOTE:
SEE GENERAL NOTES DRAWING FOR MATERIAL SPECIFICATIONS, FOUNDATION AND STANDARD NOTES

REF DWG: E16

AASHTO 6th Edition Spec's

OH–23

SEALED BY:

SOUTH CAROLINA PROFESSIONAL ENGINEER Robert R Wigington No. 35290 ROBERT R WIGINGTON

Nov 8 2024

NO:	REVISIONS	DATE	MADE	CHECKED
0	CHECK COMPLETE	11/8/24	DLK	DLJ

walpar
A valmont COMPANY
POST OFFICE BOX 28650
BIRMINGHAM ALABAMA 35228
4200 JEFFERSON AVENUE
BIRMINGHAM ALABAMA 35221
PHONE (205)–925–4990
FAX (205) 925–7273

STATE:	South Carolina
FED PROJ:	Carolina Crossroads Phase 1 & 2
ST PROJ:	P039718
COUNTY:	Lexington & Richland
ROUTE:	I–26 & I–126
SUBJECT:	CANTILEVER SIGN SUPPORT DETAILS OF UPRIGHT
FOR:	Archer–United Joint Venture
DRAWN BY:	DLK DATE: 11/6/24
CHECKED BY:	DLJ DATE: 11/8/24
DWG NO:	C3546–110

NAME: E:\acad\JobsNPrg\3546\3546–110.dwg DATE: NOV 08, 2024 TIME: 7:23 AM dj706290

CBTUPDET

MARK	QTY	"A"	"C"	PANELS	"D"	"E"	"F"	"G"	"H"	"J"	"K"	"L"	"M"	"N"	"P"	"W"	"X"	"Y"	"Z"
111T1	1	37'–6¼	4'–3	7 @ 4'–8 3/16(±) = 32'–9¼	4'–6	1'–9	4 @ 4 1/16 = 1'–6¾	3'–9½	5 @ 3¾ = 1'–6¾	14'–9½	4'–0	4¼	2½	2 7/16	4½	¼	1	7½	4

MARK	"R"	"S"	"T"	"V"	1	2	3	4	5	6	7	8	9	10	11
111T1	4'–6	32'–1	-------	-------	a	b	d	f	g	h	k	m	n	p	z1

VENT HOLE SIZES	
WEB MEMBER (OD)	HOLE DIA ± ¼"
< 3.500	¾
3.500	1¾
4.000	2
4.500	2¼
5.563	2¾
6.625	3¼

PARTS PER CONT	PART MARK NO	NO OF PIECES REQ'D	SECTION SYM	DESCRIPTION OF MATERIAL	LENGTH FEET	LENGTH INCHES	PARTS FOR ONE UNIT	
	111T1	1		CANTILEVER TRUSS				
	a	4	PIPE	4.500 x .237	37	5⅞		
	b	16	PIPE	1.660 x .140	3	10 1/16		
	d	14	PIPE	1.660 x .140	5	9⅜		
	f	3	PIPE	1.900 x .200	4	1¾		
	g	14	PIPE	1.900 x .200	5	11¼		
	h	4	PIPE	1.900 x .145	5	10 1/16		
	k	1	PL	½ x 43½	4	11½		
	m	2	PL	½ x 8¼	3	7½		
	n	4	PL	¼ x 2½	0	4¼		
	p	4	PL	¾ x 10½ DIA.	–	–		
	z1	2	OP	1¼" FORGED HALF CPLG (3000#)	–	–		

C3546–111

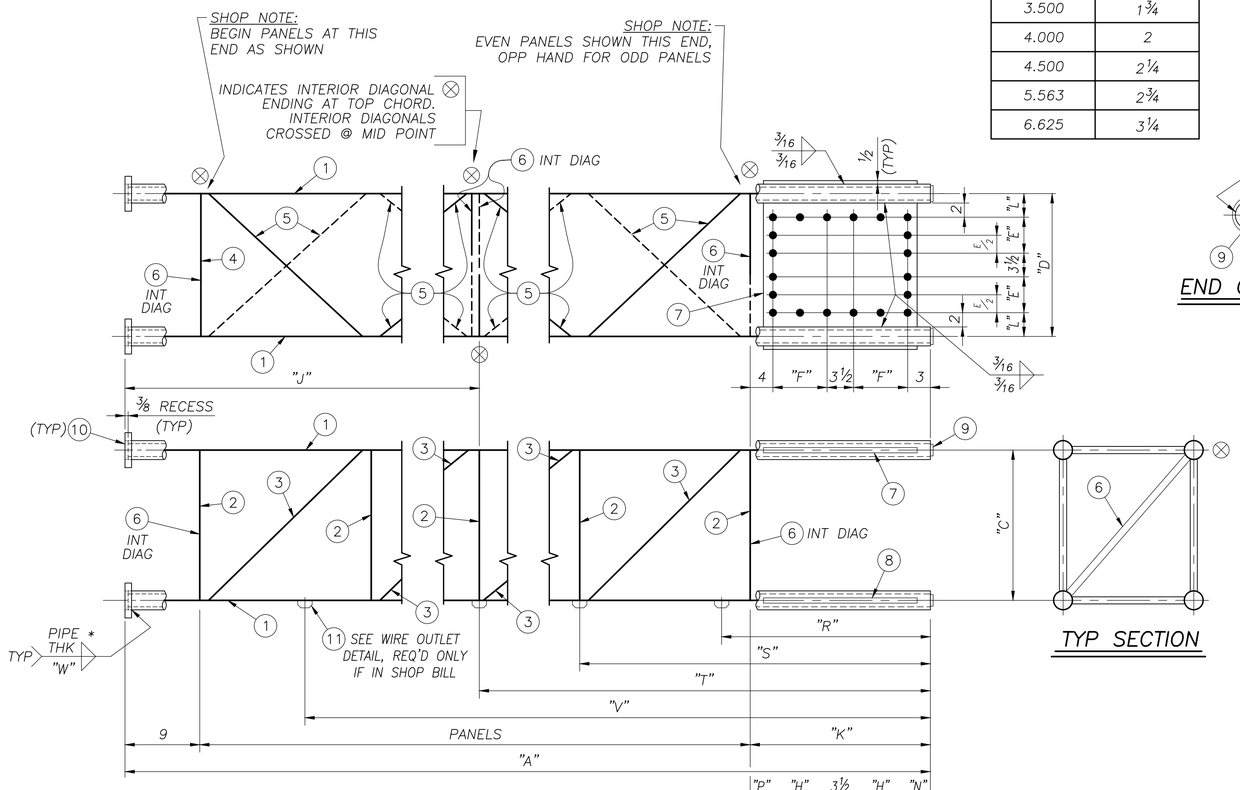

TYP SECTION

*NOTE: PIPE THK – 1/16" FOR PIPE WALLS > ¼"

TRUSS

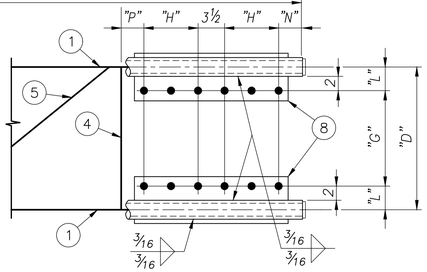

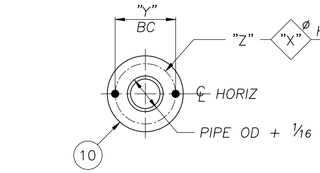

FLANGE DETAIL

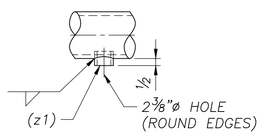

WIRE OUTLET DETAIL

SHOP NOTE: INTERIOR DIAGONALS MAY BE OFFSET UP TO 6" FROM PANEL POINTS ON TRUSS IN ORDER TO AVOID INTERSECTING WELDS IN THE AREA OF OTHER WEB MEMBERS. DO NOT OFFSET MEMBERS SO AS TO INTERFERE WITH BOLTED CONNECTIONS AT FIELD SPLICES.

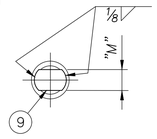

END CAP DETAIL

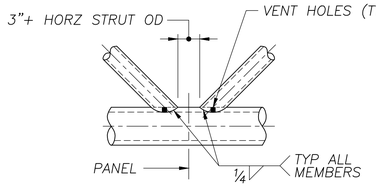

JOINT DETAIL

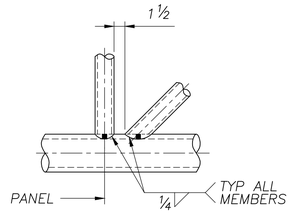

JOINT DETAIL

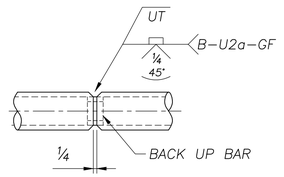

OPTIONAL CHORD SPLICE

(FOR WALL THK 5/16" OR GREATER ONLY)

NOTE:

ALL HOLES TO BE Ø 7/8 UNLESS NOTED

NOTE:

SEE GENERAL NOTES DRAWING FOR MATERIAL SPECIFICATIONS, FOUNDATION AND STANDARD NOTES

REF DWG: E16

OH–23

AASHTO 6th Edition Spec's

SEALED BY:

SOUTH CAROLINA PROFESSIONAL ENGINEER Robert R Wigington No. 35290 REGISTERED ROBERT R WIGINGTON

Nov 8 2024

NO:	REVISIONS	DATE	MADE	CHECKED
0	CHECK COMPLETE	11/8/24	DLK	DLJ

walpar
A valmont COMPANY
POST OFFICE BOX 28650
BIRMINGHAM ALABAMA 35228
4200 JEFFERSON AVENUE
BIRMINGHAM ALABAMA 35221
PHONE (205)–925–4990
FAX (205) 925–7273

0

CBTSDET

STATE:	South Carolina
FED PROJ:	Carolina Crossroads Phase 1 & 2
ST PROJ:	P039718
COUNTY:	Lexington & Richland
ROUTE:	I–26 & I–126
SUBJECT:	CANTILEVER SIGN SUPPORT
	DETAIL OF TRUSS
FOR:	Archer–United Joint Venture
DRAWN BY:	DLK DATE: 11/6/24
CHECKED BY:	DLJ DATE: 11/8/24
DWG NO:	C3546–111

NAME: E:\acad\JobsNPrg\3546\3546–111.dwg DATE: NOV 08, 2024 TIME: 7:22 AM dj706290

MARK	QTY	"B"	"C"	PANELS	"D"								"M"			"W"	"X"	"Y"	"Z"
112T1	1	10'–10¼	4'–3	2 @ 4'–8⅛(±) = 9'–4¼	4'–6								2½			¼	1	7½	4

MARK		"S"	"T"	"V"	1	2	3	4	5	6			9	10	11
112T1		5'–5 3/16	-------	-------	a	b	d	f	g	h			n	p	z1

					C3546–112			
PARTS PER CONT	PART MARK NO	NO OF PIECES REQ'D	SECTION SYM	DESCRIPTION OF MATERIAL	LENGTH FEET	LENGTH INCHES	PARTS FOR ONE UNIT	
	112T1	1		CANTILEVER TRUSS				
	a	4	PIPE	4.500 x .237	10	9 3/8		
	b	6	PIPE	1.660 x .140	3	10 11/16		
	d	4	PIPE	1.660 x .140	5	9 3/8		
	f	4	PIPE	1.900 x .200	4	1 3/4		
	g	4	PIPE	1.900 x .200	5	11 1/4		
	h	2	PIPE	1.900 x .145	5	10 1/16		
	n	4	PL	¼ x 2½	0	4¼		
	p	4	PL	¾ x 10½ DIA.	–	–		
	z1	1	OP	1¼" FORGED HALF CPLG (3000#)	–	–		

SHOP NOTE:
ODD PANELS SHOWN THIS END,
OPP HAND FOR EVEN PANELS

SHOP NOTE:
BEGIN PANELS AT THIS END AS SHOWN

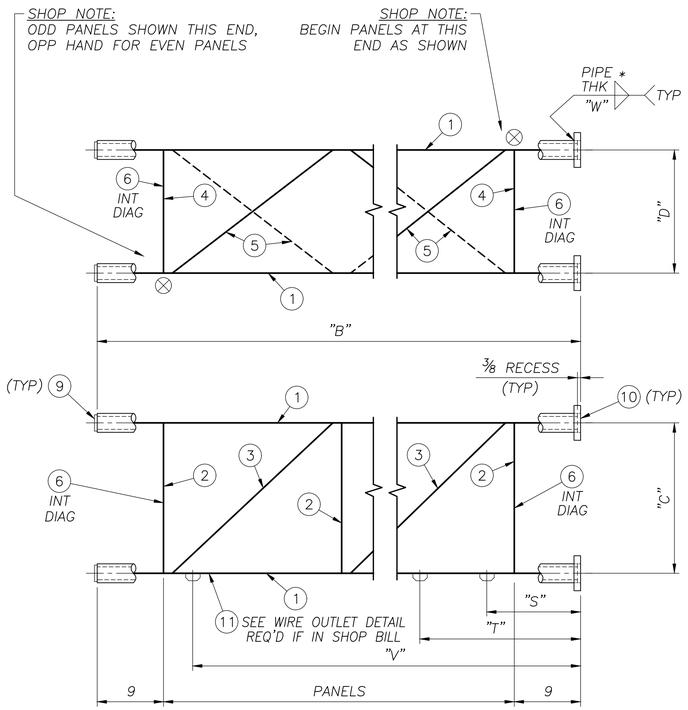

⊗ INDICATES INTERIOR DIAGONAL ENDING AT TOP CHORD

TRUSS

*NOTE: PIPE THK – 1/16" FOR PIPE WALLS > ¼"

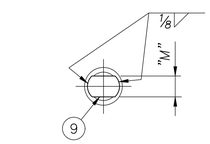

END CAP DETAIL

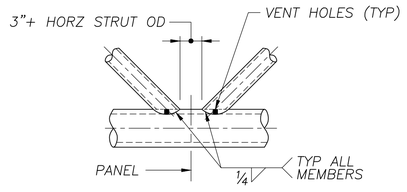

JOINT DETAIL

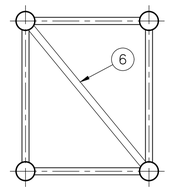

TYP SECTION

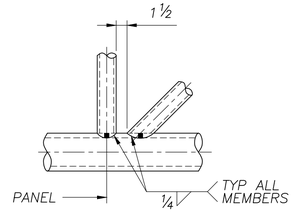

JOINT DETAIL

VENT HOLE SIZES	
WEB MEMBER OD	HOLE DIA ± ¼"
< 3.500	¾
3.500	1¾
4.000	2
4.500	2¼
5.563	2¾
6.625	3¼

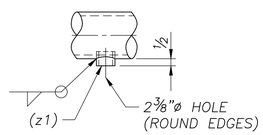

WIRE OUTLET DETAIL

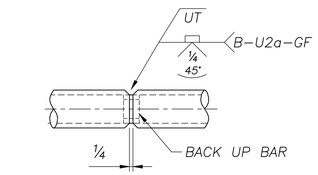

OPTIONAL CHORD SPLICE

(FOR WALL THK 5/16" OR GREATER ONLY)

SHOP NOTE:

INTERIOR DIAGONALS MAY BE OFFSET UP TO 6" FROM PANEL POINTS ON TRUSS IN ORDER TO AVOID INTERSECTING WELDS IN THE AREA OF OTHER WEB MEMBERS.

DO NOT OFFSET MEMBERS SO AS TO INTERFERE WITH BOLTED CONNECTIONS AT FIELD SPLICES.

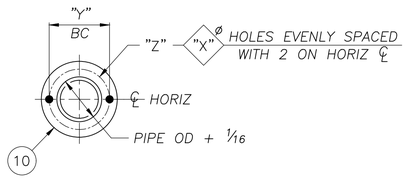

FLANGE DETAIL

NOTE:
SEE GENERAL NOTES DRAWING FOR MATERIAL SPECIFICATIONS, FOUNDATION AND STANDARD NOTES

REF DWG: E16

OH–23

AASHTO 6th Edition Spec's

SEALED BY:

SOUTH CAROLINA PROFESSIONAL ENGINEER ROBERT R WIGINTON No. 35290

Nov 8 2024

walpar
A valmont COMPANY
POST OFFICE BOX 28650
BIRMINGHAM ALABAMA 35228
4200 JEFFERSON AVENUE
BIRMINGHAM ALABAMA 35221
PHONE (205)–925–4990
FAX (205) 925–7273

STATE:	South Carolina
FED PROJ:	Carolina Crossroads Phase 1 & 2
ST PROJ:	P039718
COUNTY:	Lexington & Richland
ROUTE:	I–26 & I–126
SUBJECT:	CANTILEVER SIGN SUPPORT DETAIL OF TRUSS
FOR:	Archer–United Joint Venture
DRAWN BY:	DLK DATE: 11/6/24
CHECKED BY:	DLJ DATE: 11/8/24
DWG NO:	C3546–112

NO:	REVISIONS	DATE	MADE	CHECKED
0	CHECK COMPLETE	11/8/24	DLK	DLJ

NAME: E:\acad\JobsNPrg\3546\3546–112.dwg DATE: NOV 08, 2024 TIME: 7:21 AM dj706290

CBTESDET

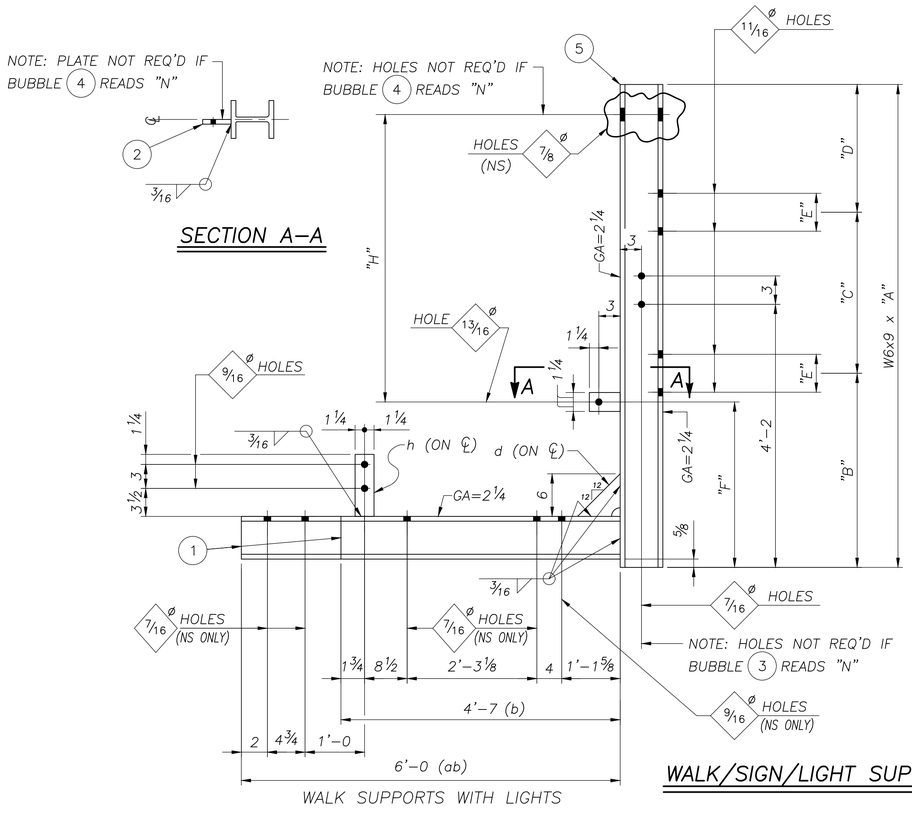

WALK SUPPORTS WITH LIGHTS

WALK/SIGN/LIGHT SUPPORTS

MARK	QTY	"A"	"B"	"C"	"D"	"E"	"F"	"H"	1	2	3	4	5
113S1	1	10'-9 1/2	4'-9 1/2	4'-3	1'-9	5 1/8	2'-3 1/4	8'-3 1/2	ab	f	Y	Y	a
113S2	1	10'-9 1/2	4'-9 1/2	4'-3	1'-9	5 1/8	2'-3 1/4	8'-3 1/2	ab	f	N	Y	aa
113S3	2	9'-6 1/2	4'-9 1/2	4'-3	6	5 1/8	2'-3 1/4	6'-3 1/2	ab	f	N	Y	ba
113S4	1	9'-6 1/2	4'-9 1/2	4'-3	6	5 1/8	2'-3 1/4	6'-3 1/2	ab	f	Y	Y	da
113S5	1	9'-6 1/2	4'-9 1/2	4'-3	6	5 1/8	----	----	b	–	Y	N	fa

I don't think this hanger needs holes drilled here - it is not on the end of the walkway.

Edit Comments (As for the comment regarding extra holes on the sign hanger mark 113S5, those holes will remain as the components have already been fabricated and are ready for shipment.)

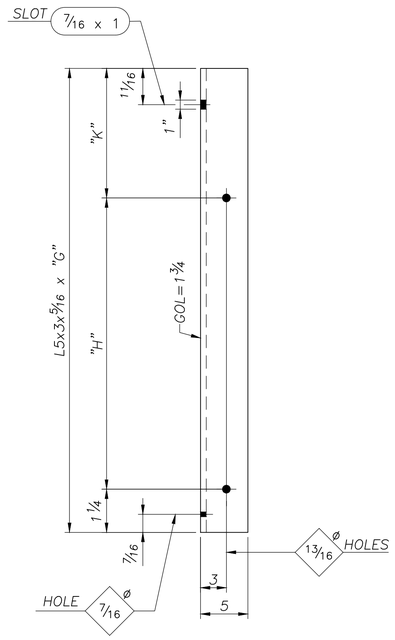

SIGN HANGERS

MARK	QTY	"G"	"H"	"K"
113H1	2	12'-0 1/4	8'-3 1/2	3'-7 1/2
113H2	3	9'-6 1/4	6'-3 1/2	3'-1 1/2

C3546–113

PARTS PER CONT	PART MARK NO	NO. OF PIECES REQ'D	SECTION SYM	DESCRIPTION OF MATERIAL	LENGTH FEET	LENGTH INCHES	PARTS FOR ONE UNIT	
	113S1	1		WALK/SIGN/LIGHT SUPPORT				
	a	1	W	6 x 9	10	9 1/2		
	ab	1	W	6 x 9	6	0		
	d	1	PL	1/4 x 6	0	6		
	f	1	PL	3/8 x 2 1/2	0	4 1/4		
	h	1	PL	1/2 x 2 1/2	0	7 3/4		
	113S2	1		WALK/SIGN/LIGHT SUPPORT				
	aa	1	W	6 x 9	10	9 1/2		
	ab	1	W	6 x 9	6	0		
	d	1	PL	1/4 x 6	0	6		
	f	1	PL	3/8 x 2 1/2	0	4 1/4		
	h	1	PL	1/2 x 2 1/2	0	7 3/4		
	113S3	2		WALK/SIGN/LIGHT SUPPORT				
	ba	2	W	6 x 9	9	6 1/2		
	ab	2	W	6 x 9	6	0		
	d	2	PL	1/4 x 6	0	6		
	f	2	PL	3/8 x 2 1/2	0	4 1/4		
	h	2	PL	1/2 x 2 1/2	0	7 3/4		
	113S4	1		WALK/SIGN/LIGHT SUPPORT				
	da	1	W	6 x 9	9	6 1/2		
	ab	1	W	6 x 9	6	0		
	d	1	PL	1/4 x 6	0	6		
	f	1	PL	3/8 x 2 1/2	0	4 1/4		
	h	1	PL	1/2 x 2 1/2	0	7 3/4		
	113S5	1		WALK SUPPORTS				
	fa	1	W	6 x 9	9	6 1/2		
	b	1	W	6 x 9	4	7		
	d	1	PL	1/4 x 6	0	6		
	h	1	PL	1/2 x 2 1/2	0	7 3/4		
	113H1	2		SIGN HANGERS				
	k	2	L	5 x 3 x 5/16	12	0 1/4		
	113H2	3		SIGN HANGERS				
	ak	3	L	5 x 3 x 5/16	9	6 1/4		

NOTE:

SEE GENERAL NOTES DRAWING FOR MATERIAL SPECIFICATIONS, FOUNDATION AND STANDARD NOTES

REF DWG: E16

OH–23

AASHTO 6th Edition Spec's

SEALED BY:

Robert R Wigington
SOUTH CAROLINA
No. 35290
ROBERT R WIGINGTON

Nov 8 2024

NO:	REVISIONS	DATE	MADE	CHECKED
0	CHECK COMPLETE	11/8/24	DLK	DLJ

walpar
A valmont COMPANY
POST OFFICE BOX 28650
BIRMINGHAM ALABAMA 35228
4200 JEFFERSON AVENUE
BIRMINGHAM ALABAMA 35221
PHONE (205)–925–4990
FAX (205) 925–7273

STATE: South Carolina
FED PROJ: Carolina Crossroads Phase 1 & 2
ST PROJ: P039718
COUNTY: Lexington & Richland
ROUTE: I–26 & I–126

SUBJECT: SIGN SUPPORT
WALK SUPPORT & SIGN HANGER DETAILS

FOR: Archer–United Joint Venture

DRAWN BY: DLK DATE: 11/6/24
CHECKED BY: DLJ DATE: 11/8/24

DWG NO: C3546–113

SH–DET4

NAME: E:\acad\JobsNPrg\3546\3546–113.dwg DATE: NOV 08, 2024 TIME: 7:21 AM dj706290